6T-2 SITE DUMPER.

THE 6T-2 SITE DUMPER IS THE SAFEST AND MOST PRODUCTIVE MACHINE IN ITS CLASS. WITH A SPECIFICALLY DESIGNED JCB DRIVETRAIN, AND 3 DIFFERENT SKIP VARIANTS ON OFFER, YOUR BUSINESS CAN TRUST IN JCB TO GET THE JOB DONE.

Unrivalled safety.

1 The JCB SiTESAFE cab on the 6T machine provides the operator safety and comfort.

2 An initial movement alarm warns people in the surrounding area of the machine. An optional object detection system alerts the operator to any objects near to the machine, preventing accidents and damage, whilst in operation.

3 The front tip and swivel tip machines come with a front mounted camera as standard to comply with visibility standards. Additionally, there is the option of upgrading to the full side and rear camera kit, further improving visibility and safety.

For even greater operator protection, an optional skip guard prevents large pieces of material falling out of the back of the skip.

4 As an alternative to the standard ROPS frame, a ROPS/FOPS Level II frame is available, providing a greater level of safety for the operator. JCB SiTESAFE cab offers even greater levels of safety.

SPECIFICATION 1T-2, 3T-2, 6T-2, 9T-2 SITE DUMPERS

STATIC DIMENSIONS AND CAPACITIES

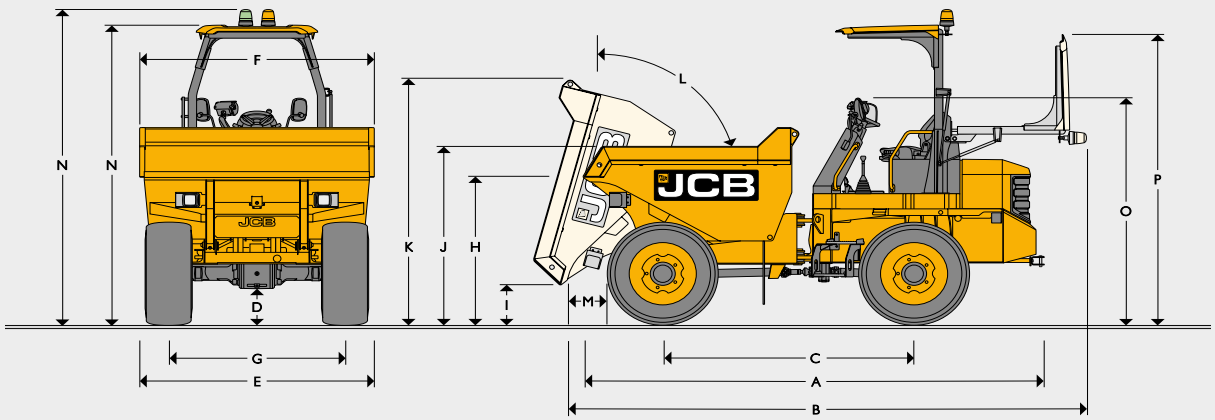

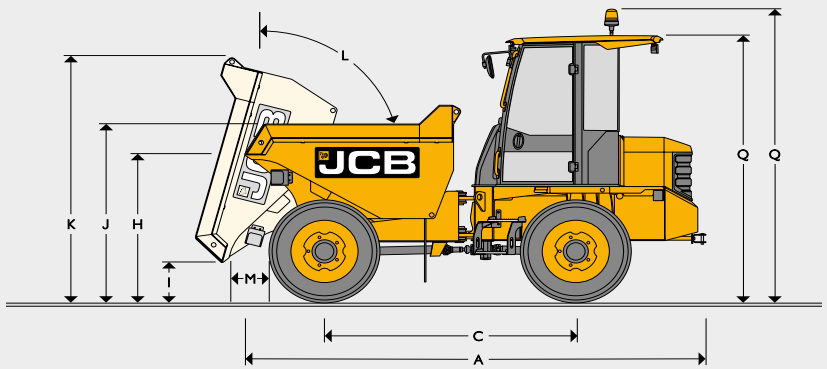

STATIC DIMENSIONS AND CAPACITIES

			1T-2 HT	3T-2 FT	3T-2 ST	6T-2 FT	6T-2 ST	6T SiTESAFE Skip	9T-2 FT	9T SiTESAFE Skip
A	Overall length	mm	3095	3758	3926	4792	5047	4771	4912	4918
B	Overall length (ROPS or FOPS folded)	mm	3403	4192	4360	5023	5280	5011	5141	5158
C	Wheelbase	mm	1500	1950	1950	2480	2480	2680	2680	2880
D	Minimum ground clearance	mm	263	206	206	312	312	316	359	362
E	Total width (Standard/Narrow tyres)	mm	1106/980	1650	1650	2255	2255	2300	2380	2500
F	Skip width	mm	980	1650	1654	2310	2018	2300	2500	2500
G	Track width (Standard/Narrow tyres)	mm	850/782	1360	1360	1850	1850	2225	1880	2380
I	Height to front lip of skip (untipped)	mm	1134/2259	1367	1467	1672	1719	1523	1732	1558
H	Height to front lip of skip (tipped)	mm	452/1573	306	856	310	1122	508	415	694
J	Load over height	mm	1268/2392	1504	1567	1791	2028	2150	2001	2318
K	Height over skip (tipped)	mm	1865/3037	2085	2860	2411	3674	2456	2680	2732
L	Skip tip angle	Degrees	90	75	67	80	70	75	80	75
M	Discharge distance front	mm	391	568	548	604	582	580	526	482
	Discharge distance side	mm	N/A	N/A	319	N/A	241	N/A	N/A	N/A
	Turning radius to outside of skip	mm	2712	5448	4573	5900	5777	5645	6372	6077
	Turning radius to outside of tyres	mm	2559	4464	4464	5755	5739	5526	6218	5961
	Steering angle (+/–)	Degrees	39	30	30	30	30	34	30	34
	Oscillation	Degrees	15	10.5	10.5	10	10	10	10	10
N	Height to top of ROPS (with/without beacon)	mm	2792/2602	3016/2835	3016/2835	3354/3131	3354/3131	3354/3131	3570/3347	3177/3400
N	Height to top of ROPS/FOPS (with/without beacon)	mm	N/A	N/A	N/A	3354/3169	3354/3169	3354/3169	3570/3385	3215/3400
O	Height with folded ROPS	mm	1624	1857	1857	2169	2169	2013	2319	2059
P	Height with folded ROPS/FOPS	mm	N/A	N/A	N/A	2936	2936	2936	3154	2982
Q	Height to top of cab (with/without beacon)	mm	N/A	N/A	N/A	3296/3014	3296/3014	3296/3014	3512/3230	3060/3342

*With high tip mechanism raised.

CAPACITIES

		1T-2 HT	3T-2 FT	3T-2 ST	6T-2 FT	6T-2 ST	6T SiTESAFE Skip	9T-2 FT	9T SiTESAFE Skip
Payload	kg	1000	3000	3000	6000	6000	6000	9000	9000
Operating weight - ISO6016 full tank of fuel & 75kg operator (ROPS)	kg	1515	2345	2390	4840	5070	5040	5400	5085
Operating weight - ISO6016 full tank of fuel & 75kg operator (ROPS/FOPS)	kg	N/A	N/A	N/A	4920	5150	4960	5480	5165
Operating weight - ISO6016 full tank of fuel & 75kg operator (Cab)	kg	N/A	N/A	N/A	5180	5410	5220	5740	5425
Tipping type		Front tip - high tip	Front tip	Swivel tip	Front tip	Swivel tip	Front tip	Front tip	Front tip
Skip Capacity (fluid)	l	307	1050	930	1974	1615	1900	2435	2170
Skip Capacity (struck)	l	454	1420	1237	2537	2514	2725	3735	3720
Skip capacity (heaped)	l	554	1723	1615	3191	3149	3300	4531	4300

ENGINE

		1T-2 HT	3T-2 FT	3T-2 ST	6T-2 FT	6T-2 ST	6T SiTESAFE Skip	9T-2 FT	9T SiTESAFE Skip
Engine model		Perkins 403J.II	Perkins 403J-17		JCB DieselMAX				
Capacity	cc	1131	1662		3000				
Aspiration		Naturally Aspirated	Naturally Aspirated		Turbocharged				
Cylinders		3	3		4				
Max. gross power to SAE J1995/ISO 14396	kW (hp)	16.1 (21.6)	18.9 (25.3)		55 (74)				
Max. torque	Nm	66.8	87.2		440				
Emissions compliance		EU Stage V / Tier 4 Final	Stage V		Stage V				

TRANSMISSION

		1T-2 HT	3T-2 FT	3T-2 ST	6T-2 FT	6T-2 ST	6T SiTESAFE Skip	9T-2 FT	9T SiTESAFE Skip
Type		Hydrostatic pump to 4 hydraulic wheel motors	Hydrostatic motor via transfer box to front and rear axles		Powershuttle				
Tyre size		"255/75 x 15.3 x 8 ply (option 7.0 x 12 narrow tyre)"	295/80 x 15.3 (10 ply)		405-70-20 14PR			500-60-22.5 16PR	
Drive		Hydrostatic I/I	"2/2 (High and low range - forward and reverse) Hydrostatic - permanent 4WD"		4/4 Forward and reverse - permanent 4WD				
Max. travel speed (unladen) 1st gear	mph (kph)	7.4 (11.9)	5.0 (8) - Tortoise		3.1 (5.0)			2.8 (4.5)	
Max. travel speed (unladen) 2nd gear	mph (kph)	-	13 (21) - Hare		5.0 (8.1)			4.7 (7.5)	
Max. travel speed (unladen) 3rd gear	mph (kph)	-	-		9.4(15.2)			8.8 (14.1)	
Max. travel speed (unladen) 4th gear	mph (kph)	-	-		15.9 (25.6)			15.3 (24.7)	