duma rent
www.duma-rent.com

MANITOU
HANDLING YOUR WORLD

647690 EN (29/01/2019)

MC 25-2 D K ST3A S1
MC 25-4 D K ST3A S1
MC 30-2 D K ST3A S1
MC 30-4 D K ST3A S1
MSI 25 D K ST3A S5
MSI 30 D K ST3A S5
MSI 35 D K ST3A S5

OPERATOR'S MANUAL
(ORIGINAL INSTRUCTIONS)

IMPORTANT

Carefully read and understand this instruction manual before using the lift truck.

It contains all information relating to operation, handling and lift truck equipment, as well as important recommendations to be followed.

This document also contains precautions for use, as well as information on the servicing and routine maintenance required to ensure the lift truck's continued safety of use and reliability.

WHENEVER YOU SEE THIS SYMBOL IT MEANS:

⚠ IMPORTANT ⚠

WARNING ! BE CAREFUL ! YOUR SAFETY OR THE SAFETY OF THE LIFT TRUCK IS AT RISK.

- This manual has been produced on the basis of the equipment list and the technical characteristics given at the time of its design.
- The level of equipment of the lift truck depends on the options chosen and the country of sale.
- According to the lift truck options and the date of sale, certain items of equipment/functions described herein may not be available.
- Descriptions and figures are non binding.
- MANITOU reserves the right to change its models and their equipment without being required to update this manual.
- The MANITOU network, consisting exclusively of qualified professionals, is at your disposal to answer all your questions.
- This manual is an integral part of the lift truck.
- It is to be kept in its storage space at all times for ease of reference.
- Hand this manual to the new owner if the lift truck is resold.

647690 (29/01/2019)
MC..D K ST3A S1 / MSI..D K ST3A S5

1st ISSUE	10/04/2018	
UPDATED	29/01/2019	1-8 ; 1-9 ; 1-16 2-1 – 2-52 3-1 – 3-40

Manitou BF S.A Limited liability company with a Board of Directors.
Head office: 430, Rue de l'Aubinière - 44150 Ancenis - FRANCE
Share capital: 39,548,949 euros
857 802 508 RCS Nantes.
Tel: +33 (0)2 40 09 10 11
www.manitou.com

This manual is for information purposes only. Any reproduction, copy, representation, recording, transfer, distribution, or other, in part or in whole, in any format is prohibited. The plans, designs, views, commentaries and instructions, even the document organization that are found in this document, are the intellectual property of MANITOU BF. Any violation of the aforementioned may lead to civil and criminal prosecution. The logos as well as the visual identity of the company are the property of MANITOU BF and may not be used without express and formal authorization. All rights are reserved.

1 - OPERATING AND SAFETY INSTRUCTIONS

2 - DESCRIPTION

3 - MAINTENANCE

4 - OPTIONAL ATTACHMENTS FOR USE WITH THE RANGE

1 - OPERATING AND SAFETY INSTRUCTIONS

647690 (29/01/2019)
MC.. DK ST3A S1 / MSI.. DK ST3A S5

647690 (29/01/2019)
MC.. DK ST3A S1 / MSI.. DK ST3A S5

04

ASSISTANCE I 23 SIMPLE TIPS

The Manitou Group wishes to assist you in reducing the consumption of the machines to help you reduce your carbon footprint.

Chose a machine with an appropriate power rating for your needs.

Switch off your engine after running at idle for more than 3 minutes.

Optimum engine efficiency is achieved at the maximum torque engine speed.

Preferably use a fan control and reversal system.

Favor "smart" electronically-managed transmissions.

Use the air-conditioning with windows and doors closed.

Preferably use LED headlights.

Adapt the type of tire to your environment.

Ensure that your tires are inflated to the correct pressure.

Check the parking brake adjustment.

Preferably use manufacturer-recommended attachments

Check the general condition of your trailer.

Adapt your maximum towable load.

Use the attachments that are suitable for your machine.

Check the hydraulic adjustment of your attachments.

Observe the maintenance periods.

Regularly clean the radiator, the air filter, etc.

Lubricate regularly.

Preferably buy through a manufacturer-approved dealer.

Favor OEM parts.

Study the manufacturers' maintenance contracts.

You can follow eco-driving courses.

Demand to know the consumption and emissions of the machines.

Calculate your consumption and emissions at reduce.manitou.com

647690 (29/01/2019)
MC.. DKST3A S1 / MSI .. DKST3A S5

1 - OPERATING AND SAFETY INSTRUCTIONS

INSTRUCTIONS TO THE COMPANY MANAGER 1-6

THE SITE 1-6

THE OPERATOR 1-6

THE LIFT TRUCK 1-6

A - THE TRUCK'S SUITABILITY FOR THE JOB . . . 1-6
B - ADAPTATION OF THE LIFT TRUCK TO STANDARD ENVIRONMENTAL CONDITIONS . . . 1-6
C - MODIFICATION OF THE LIFT TRUCK . . . 1-7
D - FRENCH ROAD TRAFFIC RULES . . . 1-7

INSTRUCTIONS 1-7

MAINTENANCE 1-7

INSTRUCTIONS TO THE OPERATOR 1-8

FOREWORD 1-8

GENERAL INSTRUCTIONS 1-8

A - OPERATOR'S MANUAL . . . 1-8
B - AUTHORISATION FOR USE IN FRANCE . . . 1-8
C - MAINTENANCE . . . 1-8
D - MODIFICATION OF THE LIFT TRUCK . . . 1-8
E - LIFTING PEOPLE . . . 1-8

OPERATING INSTRUCTIONS UNLADEN AND LADEN 1-9

A - BEFORE STARTING THE LIFT TRUCK . . . 1-9
B - DRIVER'S OPERATING INSTRUCTIONS . . . 1-9
C - ENVIRONMENT . . . 1-9
D - VISIBILITY . . . 1-10
E - STARTING THE LIFT TRUCK . . . 1-10
F - DRIVING THE LIFT TRUCK . . . 1-11
G - STOPPING THE LIFT TRUCK . . . 1-12
H - DRIVING THE LIFT TRUCK ON THE PUBLIC HIGHWAY . . . 1-12

INSTRUCTIONS FOR HANDLING A LOAD 1-13

A - CHOICE OF ATTACHMENTS . . . 1-13
B - WEIGHT OF LOAD AND CENTRE OF GRAVITY . . . 1-13
C - TRANSVERSE ATTITUDE OF THE LIFT TRUCK . . . 1-13
D - PICKING UP A LOAD ON THE GROUND . . . 1-14
PICKING UP AND LAYING DOWN A HIGH LOAD ON TIRES . . . 1-14

LIFT TRUCK MAINTENANCE INSTRUCTIONS 1-16

GENERAL INSTRUCTIONS 1-16

MAINTENANCE 1-16

LUBRICANT AND FUEL LEVELS 1-16

HYDRAULICS 1-16

ELECTRICITY 1-16

WELDING 1-17

WASHING THE LIFT TRUCK 1-17

TRANSPORTING THE LIFT TRUCK 1-17

647690 (29/01/2019)
MC . . D K ST3A S1 / MSI . . D K ST3A S5

IF THE LIFT TRUCK IS NOT TO BE USED FOR A LONG TIME *1-18*

INTRODUCTION **1-18**

PREPARING THE LIFT TRUCK **1-18**

DEF (Diesel Exhaust Fluid) TANK **1-18**

PROTECTING THE ENGINE **1-18**

PROTECTING THE LIFT TRUCK **1-18**

BRINGING THE LIFT TRUCK BACK INTO SERVICE **1-19**

LIFT TRUCK DISPOSAL *1-20*

RECYCLING OF MATERIALS **1-20**

METALS 1-20

PLASTICS 1-20

RUBBER 1-20

GLASS 1-20

ENVIRONMENTAL PROTECTION **1-20**

WORN OR DAMAGED PARTS 1-20

USED OIL 1-20

USED BATTERIES 1-20

647690 (29/01/2019)
MC . . D K ST3A S1 / MSI . . D K ST3A S5

INSTRUCTIONS TO THE COMPANY MANAGER

THE SITE

- Proper management of the lift truck's area of travel will reduce the risk of accidents:
  - Ground not unnecessarily uneven or obstructed,
  - No excessive slopes,
  - Pedestrian traffic controlled, etc.

THE OPERATOR

- Only qualified, authorised personnel can use the lift truck. This authorisation is given in writing by the appropriate person in the establishment with respect to the use of lift trucks and must be carried permanently by the operator.

⚠ IMPORTANT ⚠

Experience has shown that there are a number of inappropriate ways in which the lift truck might be used. Such foreseeable misuse, of which the main examples are listed below, is strictly forbidden.

-The foreseeable abnormal behaviour resulting from ordinary negligence, but not from any intentional misuse of the machinery.

- The reflex reactions of a person in the event of a malfunction, incident, fault, etc. during operation of the lift truck.

- Behaviour resulting from application of the "principle of least effort" when performing a task.

- For certain machines, the foreseeable behaviour of such persons as: apprentices, teenagers, handicapped persons, trainees tempted to drive a lift truck, operators tempted to operate the machine to win a bet, in competition or for their own personal experience.

The person in charge of the equipment must take these criteria into account when assessing whether or not a person will make a suitable driver.

THE LIFT TRUCK

A - THE TRUCK'S SUITABILITY FOR THE JOB

- MANITOU has ensured that this lift truck is suitable for use under the standard operating conditions defined in this operator's manual, with a **STATIC TEST COEFFICIENT OF 1.33** and a **DYNAMIC TEST COEFFICIENT OF 1**, as specified in harmonised standard **ISO 3691-1** for mast trucks.
- Before commissioning, the company manager must make sure that the lift truck is appropriate for the work to be done, and perform certain tests (in accordance with current legislation).

B - ADAPTATION OF THE LIFT TRUCK TO STANDARD ENVIRONMENTAL CONDITIONS

- In addition to series equipment mounted on your lift truck, many options are available, such as: road lighting, stop lights, revolving light, reverse lights, reverse buzzer alarm, front light, rear light, etc.
- The operator must take into account the operating conditions to specify the lift truck's signalling and lighting equipment. Contact your dealer.
- Take into account climatic and atmospheric conditions of the site of use.
  - Protection against frost (◅ 3 - MAINTENANCE).
  - Adaptation of lubricants (ask your dealer for information).
  - Engine filtration (◅ 3 - MAINTENANCE).

⚠ IMPORTANT ⚠

For operation under average climatic conditions, i.e.: between -15 °C and 35 °C, correct levels of lubricants in all the circuits are checked in production.

For operation under more severe climatic conditions, before starting up, it is necessary to drain all the circuits, then ensure correct levels of lubricants using lubricants properly suited to the relevant ambient temperatures.

The same applies to the cooling liquid.

- Preventing fire risks associated with use in dusty and flammable conditions (e.g. straw, flour, sawdust, organic waste, etc.).
- A lift truck operating in an area without fire extinguishing equipment must be equipped with an individual extinguisher. There are solutions, consult your dealer.

⚠ IMPORTANT ⚠

Your lift truck is designed for outdoor use under normal atmospheric conditions and indoor use in suitably aerated and ventilated premises.

It is forbidden to use the lift truck in areas where there is a risk of fire or potential explosion (e.g. Refineries, fuel or gas depots, stores of flammable products, etc.).

Special equipment is available for use in such areas (ask your dealer for information).

647690 (29/01/2019)
MC . . D K ST3A S1 / MSI . . D K ST3A S5

- Our trucks comply with Directive 2004/108/EC concerning electromagnetic compatibility (EMC), and with the corresponding harmonised standard EN 12895. Their proper operation is no longer guaranteed if they are used within areas in which the electromagnetic fields exceed the limit specified by that standard (10 V/m).
- Directive 2002/44/EC requires company managers to not expose their employees to excessive vibration doses. There is no recognised code of measurement for comparing the machines of different manufacturers. The actual doses received cannot therefore be measured under actual operating conditions at the user's premises.
- The following are some tips for minimising these vibration doses:
  - Select the most suitable lift truck and attachment for the intended use.
  - Adapt the seat adjustment to the operator's weight (according to lift truck model) and maintain it in good condition, as well as the cab suspension. Inflate the tyres in accordance with recommendations.
  - Ensure that the operators adapt their operating speed to suit the conditions on site.
  - As far as possible, arrange the site in such a way as to provide a flat running surface and remove obstacles and harmful potholes.

C - MODIFICATION OF THE LIFT TRUCK

- For your own safety and that of others, you must not change the structure and settings of the various components used in your lift truck by yourself (hydraulic pressure, limiter calibration, engine speed, addition of extra equipment, addition of counterweights, unapproved attachments, alarm systems, etc.). In this event, the manufacturer cannot be held liable.

D - FRENCH ROAD TRAFFIC RULES

- Only one certificate of conformity is issued. It must be kept in a safe place.
- The driving of non-approved lift trucks on the public highway is subject to the provisions of the highway code relating to special machines, defined in article R311-1 of the highway code, in category B of the Equipment Order of 20 November 1969 that determines the procedures applicable to special machines. The lift truck must be fitted with a license plate.

INSTRUCTIONS

- The operator's manual must always be in good condition and kept in the place provided on the lift truck and in the language used by the operator.
- Operator's manuals and any plates or stickers which are no longer legible or are damaged, must be replaced.

MAINTENANCE

- Maintenance or repairs other than those detailed in part: 3 - MAINTENANCE must be carried out by qualified personnel (consult your dealer) and under the necessary safety conditions to maintain the health of the operator and any third party.

⚠ IMPORTANT ⚠

Your lift truck must be inspected periodically to ensure that it remains in compliance.
The frequency of this inspection is defined by current legislation in the country in which the lift truck is used.

- Example for France "The manager in charge of the establishment using a lift truck must open and maintain a maintenance log for each machine (order of 2 March 2004) and undergo a general periodic inspection every 6 months (order of 1 March 2004)".

647690 (29/01/2019)
MC . . D K ST3A S1 / MSI . . D K ST3A S5

INSTRUCTIONS TO THE OPERATOR

FOREWORD

⚠ IMPORTANT ⚠

The risk of accident while using, servicing or repairing your lift truck can be restricted if you follow the safety instructions and safety measures detailed in these instructions.

Failure to respect the safety and operating instructions, or instructions for repairing or servicing your lift truck, may lead to serious, even fatal accident.

In order to reduce or avoid any danger with a MANITOU-approved attachment, follow the instructions of paragraph: 4 - ADAPTABLE ATTACHMENTS IN OPTION ON THE RANGE: INTRODUCTION.

- Only the operations and manoeuvres described in this operator's manual must be performed. The manufacturer cannot predict all possible risky situations. Consequently, the safety instructions given in the operator's manual and on the lift truck itself are not exhaustive.
- At any time, as an operator, you must envisage, within reason, the possible risk to yourself, to others or to the lift truck itself when you use it.

GENERAL INSTRUCTIONS

A - OPERATOR'S MANUAL

- Read the operator's manual carefully.
- The operator's manual must always be in good condition and in the place provided for it on the lift truck.
- You must report any plates and stickers which are no longer legible or which are damaged.

B - AUTHORISATION FOR USE IN FRANCE

(or see current legislation in other countries)

- Only qualified, authorised personnel can use the lift truck. This authorisation is given in writing by the appropriate person in the establishment with respect to the use of lift trucks and must be carried permanently by the operator.
- The operator is not competent to authorise the driving of the lift truck by another person.

C - MAINTENANCE

- The operator must immediately advise his superior if his lift truck is not in good working order or does not comply with the safety notice.
- The operator is prohibited from carrying out any repairs or adjustments himself, unless he has been trained for this purpose. He must keep the lift truck properly cleaned if this is among his responsibilities.
- The operator is responsible for carrying out daily maintenance (◅ 3 - MAINTENANCE).
- The operator must ensure tyres are appropriate for the type of ground (◅ 2 - DESCRIPTION). There are optional solutions, consult your dealer.
  - SAND tyres.
  - FARM tyres.
  - Snow chains.

⚠ IMPORTANT ⚠

Do not use the lift truck if the tyres are incorrectly inflated, damaged or excessively worn, because this could put your own safety or that of others at risk, or cause damage to the lift truck itself.

The fitting of foam inflated tyres is prohibited and is not guaranteed by the manufacturer, excepting prior authorisation.

- The operator is responsible for deciding and adjusting the frequency of cleaning needed to prevent the risk of fire ensuing from the build-up of flammable material(s).
- The operator should pay special attention to all the areas of the lift truck where these risk materials are likely to accumulate.

D - MODIFICATION OF THE LIFT TRUCK

- For your own safety and that of others, you must not change the structure and settings of the various components used in your lift truck by yourself (hydraulic pressure, limiter calibration, engine speed, addition of extra equipment, addition of counterweights, unapproved attachments, alarm systems, etc.). In this event, the manufacturer cannot be held liable.

E - LIFTING PEOPLE

- It is forbidden to lift or carry people.

647690 (29/01/2019)
MC . . D K ST3A S1 / MSI . . D K ST3A S5

OPERATING INSTRUCTIONS UNLADEN AND LADEN

A - BEFORE STARTING THE LIFT TRUCK

- Perform the daily maintenance operations (◁ 3 - MAINTENANCE).
- Make sure that the driver's cab is clean, particularly the floor and floor mat. Check that no movable object may hinder the operation of the lift truck.
- Make sure the lights, indicators and windscreen wipers are working properly.
- Make sure the rear view mirrors are in good condition, clean and properly adjusted.
- Make sure the horn works.

B - DRIVER'S OPERATING INSTRUCTIONS

⚠ IMPORTANT ⚠

Under no circumstances must the seat be adjusted while the lift truck is moving.

- Whatever his experience, the operator is advised to familiarise himself with the position and operation of all the controls and instruments before operating the lift truck.
- Wear clothes suited for driving the lift truck, avoid loose clothes.
- Make sure you have the appropriate protective equipment for the task to be performed.
- Prolonged exposure to high noise levels may cause hearing problems. It is recommended to wear ear muffs to protect against excessive noise.
- Always face the lift truck when getting into and out of the driver's cab.
  - Use the handle(s) provided for this purpose.
  - Use the step(s).
  - Do not jump out of the lift truck.
- Always pay attention when using the lift truck. Do not listen to the radio or music using headphones or earphones.
- Never operate the lift truck when hands or feet are wet or soiled with greasy substances.
- For increased comfort, adjust the seat to your requirements and adopt the correct position in the driver's cab.
- The operator must always be in his normal position in the driver's cab. It is prohibited to have arms or legs, or generally any part of the body, protruding from the driver's cab of the lift truck.
- The safety belt must be worn and adjusted to the operator's size.
- The control units must never in any event be used for any other than their intended purposes (e.g. climbing onto or down from the lift truck, portmanteau, etc.).
- If the control components are fitted with a forced operation (lever lock) device, it is forbidden to leave the cab without first putting these controls in neutral.
- It is prohibited to carry passengers either on the lift truck or in the cab.

C - ENVIRONMENT

- Comply with site safety regulations.
- If you have to use the lift truck in a dark area or at night, make sure it is equipped with working lights.
- During handling operations, make sure that no one is in the way of the lift truck and its load.
- Do not allow anybody to come near the working area of the lift truck or pass beneath an elevated load.
- When using the lift truck on a transverse slope, before lifting the mast, follow the instructions given in the paragraph: INSTRUCTIONS FOR HANDLING A LOAD.
- Travelling on a longitudinal slope:
  - Drive and brake gently.
  - Moving without load: Forks or attachment facing downhill.
  - Moving with load: Forks or attachment facing uphill. 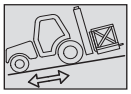
- Take into account the lift truck's dimensions and its load before trying to negotiate a narrow or low passageway.
- Never move onto a loading platform without having first checked:
  - That it is suitably positioned and made fast.
  - That the unit to which it is connected (wagon, lorry, etc.) will not shift.
  - That this platform is prescribed for the total weight of the lift truck to be loaded.
  - That this platform is prescribed for the size of the lift truck.
- Never move onto a foot bridge, floor or freight lift, without being certain that they are prescribed for the weight and size of the lift truck to be loaded and without having checked that they are in sound working order.
- Be careful in the area of loading bays, trenches, scaffolding, soft ground and manholes.
- Make sure the ground is stable and firm under the wheels before lifting the load.
- Make sure that the scaffolding, loading platform, pilings or ground is capable of bearing the load.

647690 (29/01/2019)
MC . . D K ST3A S1 / MSI . . D K ST3A S5

- Never stack loads on uneven ground, they may tip over.
- The load or the attachment must not be left just above a structure for long periods at a time because of the descending mast. In such a case, a constant watch must be kept and the height of the forks or the attachment readjusted if necessary.
- When working near aerial lines, ensure that the safety distance is sufficient between the working area of the lift truck and the aerial line.

⚠ IMPORTANT ⚠

You must consult your local electrical agency. You could be electrocuted or seriously injured if you operate or park the lift truck too close to power cables.

In the event of high winds, do not carry out handling work that jeopardises the stability of the lift truck and its load, particularly if the load catches the wind badly.

- Prevent fire risks associated with use in dusty and flammable conditions (e.g. straw, flour, sawdust, organic waste, etc.).

D - VISIBILITY

- The safety of people within the lift truck's working area, as well as that of the lift truck itself and the operator are depend on good operator visibility of the lift truck's immediate vicinity in all situations and at all times.
- This lift truck has been designed to allow good operator visibility (direct or indirect by means of rear-view mirrors) of the immediate vicinity of the lift truck while travelling with no load and with the mast in the transport position.
- Special precautions must be taken if the size of the load restricts visibility towards the front:
  - Moving in reverse,
  - Site layout,
  - assisted by a person directing the manoeuvre (while standing outside the truck's area of travel), making sure to keep this person clearly in view at all times,
  - In any event, avoid reversing over long distances.
- If visibility of your road is inadequate, ask someone to assist by directing the manoeuvre (while standing outside the truck's area of travel), making sure to keep this person clearly in view at all times.
- Keep all components affecting visibility in a clean, properly adjusted state and in good working order (e.g. windscreens, windows, windscreen wipers, windscreen washers, driving and work lights, rear-view mirrors).

E - STARTING THE LIFT TRUCK

SAFETY INSTRUCTIONS

⚠ IMPORTANT ⚠

The lift truck must only be started up or manoeuvred when the operator is sitting in the driver's cab, with his seat belt adjusted and fastened.

- Never try to start the lift truck by pushing or hauling it. Such an operation may cause severe damage to the transmission. If necessary, towing requires the transmission to be put in neutral (◁ 3 - MAINTENANCE).
- If using an emergency battery for start-up, use a battery with the same characteristics and respect battery polarity when connecting it. Connect at first the positive terminals before the negative terminals.

⚠ IMPORTANT ⚠

Failure to respect polarity between batteries can cause serious damage to the electrical circuit.
The electrolyte in the battery may produce an explosive gas. Avoid flames and generation of sparks close to the batteries.
Never disconnect a battery while it is charging.

INSTRUCTIONS

- Check the closing and locking of the hood(s).
- For lift trucks operating on gas carburisation, open the gas bottle.
- Ensure that the forward/reverse selector is set to neutral.
- Turn the ignition key to the position I to activate the electrical and preheat system.
- Check the fuel level on the indicator.
- Turn the ignition key fully, the engine should then start. Release the ignition key and let the engine run at idle.
- Do not engage the starter motor for more than 15 seconds and carry out the preheating between unsuccessful attempts.
- Make sure all the signal lights on the control instrument panel are off.
- Check all control instruments when the engine is warm and at regular intervals during use, so as to quickly detect any faults and to be able to correct them without any delay.
- If an instrument does not show the correct display, stop the engine and immediately carry out the necessary operations.

647690 (29/01/2019)
MC . . D K ST3A S1 / MSI . . D K ST3A S5

F - DRIVING THE LIFT TRUCK

SAFETY INSTRUCTIONS

⚠ IMPORTANT ⚠

Operators' attention is drawn to the risks involved in using the lift truck, in particular:
- Risk of losing control.
- Risk of losing lateral and frontal stability of the lift truck.
The operator must remain in control of the lift truck.
In the event of the lift truck overturning, do not try to leave the cabin during the incident.
YOUR BEST PROTECTION IS TO STAY FASTENED IN THE CABIN.

- Observe the company's traffic regulations or, by default, the public highway code.
- Do not carry out operations which exceed the capacities of your lift truck or attachments.
- Always drive the lift truck with the forks or attachment to the transport position, i.e. at 300mm from the ground and the carriage sloping backwards.
- Only carry loads which are balanced and properly anchored to avoid any risk of a load falling off.
- Ensure that pallets, cases, etc. are in good order and suitable for the load to be lifted,
- Familiarise yourself with the lift truck on the terrain where it will be used.
- Ensure that the service brakes are working properly.
- The loaded lift truck must not travel at speeds in excess of 12 km/h.
- Drive smoothly at an appropriate speed for the operating conditions (land configuration, load on the lift truck).
- Do not use the hydraulic mast controls when the lift truck is moving.
- Do not manoeuvre the lift truck with the mast in the raised position unless under exceptional circumstances and then with extreme caution, at very low speed and using gentle braking. Ensure that visibility is adequate.
- Take bends slowly.
- In all circumstances make sure you are in control of your speed.
- On damp, slippery or uneven terrain, drive slowly.
- Brake gently, never abruptly.
- Only use the lift truck's forward/reverse selector from a stationary position and never do so abruptly.
- Do not drive with your foot on the brake pedal.
- Always remember that hydrostatic type steering is extremely sensitive to movement of the steering wheel, so turn it gently and not jerkily.
- Never leave the engine running when the lift truck is unattended.
- Do not leave the cab when the lift truck has a raised load.
- Look where you are going and always make sure you have good visibility along the route.
- Use the rear-view mirrors frequently.
- Drive round obstacles.
- Never drive on the edge of a ditch or steep slope.
- It is dangerous to use two lift trucks simultaneously to handle heavy or voluminous loads, since this operation requires particular precautions to be taken. It must only be used exceptionally and after risk analysis.
- The ignition switch has an emergency stop mechanism in case of an operating anomaly occurring in the case of lift trucks not fitted with a punch-operated cut-out.

INSTRUCTIONS

- Always drive the lift truck with the forks or attachment to the transport position, i.e. at 300mm from the ground and the carriage sloping backwards.
- For lift trucks with gearboxes, use the selected gear (◁ 2 - DESCRIPTION).
- Release the hand brake.
- Shift the forward/reverse selector to the selected direction of travel and accelerate gradually until the lift truck moves off.

647690 (29/01/2019)
MC . . D K ST3A S1 / MSI . . D K ST3A S5

G - STOPPING THE LIFT TRUCK

SAFETY INSTRUCTIONS

- Never leave the ignition key in the lift truck during the operator's absence.
- When the lift truck is stationary, or if the operator has to leave his cab (even for a moment), place the forks or attachment on the ground, apply the parking brake and place the forward/reverse selector in neutral.
- Make sure that the lift truck is not stopped in any position that will interfere with the traffic flow and at less than one metre from the track of a railway.
- In the event of prolonged parking on a site, protect the lift truck from bad weather, particularly from frost (check the level of antifreeze), close and lock all the lift truck accesses (doors, windows, cowls, etc.).

INSTRUCTIONS

- Park the lift truck on flat ground or on an incline lower than 15%.
- Set the forward/reverse selector to neutral.
- Apply the parking brake.
- For lift trucks with gearboxes, place the gear lever in neutral.
- Lower the forks or attachment to rest on the ground.
- When using an attachment with a grab or jaws, or a bucket with hydraulic opening, close the attachment fully.
- Before stopping the lift truck after a long working period, leave the engine idling for a few moments, to allow the coolant liquid and oil to lower the temperature of the engine and transmission. Do not forget this precaution, in the event of frequent stops or warm stalling of the engine, or else the temperature of certain parts will rise significantly due to the stopping of the cooling system, with the risk of badly damaging such parts.
- Stop the engine with the ignition switch.
- Remove the ignition key.
- Lock all the accesses to the lift truck (doors, windows, cowls…).
- For lift trucks operating on gas carburisation, shut the LPG bottle. For a long lasting stop, let the engine stop naturally by shutting the LPG bottle before switching off the ignition, so as to eliminate all the fuel in the feed tube.

H - DRIVING THE LIFT TRUCK ON THE PUBLIC HIGHWAY

FRENCH ROAD TRAFFIC RULES

- The driving of non-approved lift trucks on the public highway is subject to the provisions of the highway code relating to special machines, defined in article R311-1 of the highway code, in category B of the Equipment Order of 20 November 1969 that determines the procedures applicable to special machines. The lift truck must be fitted with a license plate.

SAFETY INSTRUCTIONS

- Operators driving on the public highway must comply with current highway code legislation.
- The lift truck must comply with current road legislation. If necessary, there are optional solutions. Contact your dealer.

INSTRUCTIONS

- Make sure the revolving light is in place, switch it on and verify its operation.
- Make sure the lights, indicators and windscreen wipers are working properly.
- Switch off the working headlights if the lift truck is fitted with them.
- Place the attachment 300mm from the ground.

⚠ IMPORTANT ⚠

Never move in neutral (forward/reverse selector or gear lever in neutral or transmission cut-off button pressed) to preserve the lift truck engine brake.
Failure to follow this instruction on a slope will lead to excessive speed which may make the lift truck uncontrollable (steering, brakes) and may cause serious mechanical damage.

DRIVING THE LIFT TRUCK WITH A FRONT-MOUNTED ATTACHMENT

- You must comply with current regulations in your country, covering the possibility of driving on the public highway with a front-mounted attachment on your lift truck.
- If road legislation in your country authorises circulation with a front-mounted attachment, you must at least:
  - Protect and report any sharp and/or dangerous edges on the attachment (◁ 4 - ADAPTABLE ATTACHMENTS AVAILABLE ON THE RANGE).
  - The attachment must not be loaded.
  - Make sure that the attachment does not mask the lighting range of the forward lights.
  - Make sure that current legislation in your country does not require other obligations.

647690 (29/01/2019)
MC . . D K ST3A S1 / MSI . . D K ST3A S5

For lift trucks equipped with a towing system

OPERATING THE LIFT TRUCK WITH A TRAILER

- For using a trailer, observe the regulations in force in your country (maximum travel speed, braking, maximum weight of trailer, etc.).
- Do not forget to connect the trailer's electrical equipment to that of the lift truck.
- The trailer's braking system must comply with current legislation.
- If pulling a trailer with assisted braking, the tractor lift truck must be equipped with a trailer braking mechanism. In this case, do not forget to connect the trailer braking equipment to the lift truck.
- The vertical force on the towing hook must not exceed the maximum authorised by the manufacturer (consult the manufacturer's plate on your lift truck).
- The authorised gross vehicle weight must not exceed the maximum weight authorised by the manufacturer (consult the manufacturer's plate on your lift truck).

IF NECESSARY, CONSULT YOUR DEALER.

INSTRUCTIONS FOR HANDLING A LOAD

A - CHOICE OF ATTACHMENTS

- Only attachments approved by MANITOU can be used on its lift trucks.
- Make sure the attachment is appropriate for the work to be done (◁ 4 - ADAPTABLE ATTACHMENTS AVAILABLE ON THE RANGE).
- Make sure the attachment is correctly installed and locked onto the lift truck carriage.
- Make sure that your lift truck attachments work properly.
- Comply with the load chart limits for the lift truck for the attachment used.
- Do not exceed the rated capacity of the attachment.
- Never lift a load in a sling without the attachment provided for the purpose. There are optional solutions; contact your dealer.

B - WEIGHT OF LOAD AND CENTRE OF GRAVITY

- Before taking up a load, you must know its mass and its centre of gravity.
- The load chart for your lift truck is valid for a load in which the longitudinal position of the centre of gravity is 500 mm or 600 mm from the base of the forks (according to the model of lift truck) (Fig. B1). For a higher centre of gravity, contact your dealer.
- For irregular loads, determine the transverse centre of gravity before any movement (fig. B2) and set it in the longitudinal axis of the lift truck.

⚠ IMPORTANT ⚠

It is forbidden to move a load heavier than the effective capacity defined on the lift truck load chart.

For loads with a moving centre of gravity (e.g. liquids), take account of the variations in the centre of gravity in order to determine the load to be handled and be extra vigilant and careful to limit these variations as far as possible.

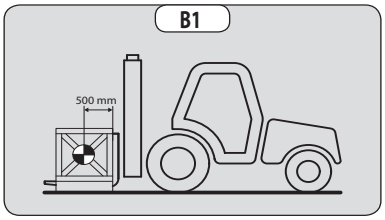

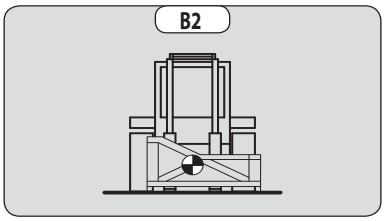

C - TRANSVERSE ATTITUDE OF THE LIFT TRUCK

The transverse attitude is the transverse slope of the chassis with respect to the horizontal.

Raising the mast reduces the lift truck's lateral stability. The transverse attitude must be set with the mast in down position as follows:

- Position the lift truck so that the bubble in the level is between the two lines (◁ 2 - DESCRIPTION).

647690 (29/01/2019)
MC . . D K ST3A S1 / MSI . . D K ST3A S5

D - PICKING UP A LOAD ON THE GROUND

- Approach the lift truck perpendicular to the load, with the forks in a horizontal position (fig. D1).
- Adjust the fork spread and centring in connection with the load (fig. D2) (optional solutions exist, consult your dealer).
- Never lift a load with a single fork.

⚠ IMPORTANT ⚠

Beware of the risks of trapping or crushing limbs when manually adjusting the forks.

- Move the lift truck forward slowly (1) and bring the forks to stop in front of the load (fig. D3), if necessary, slightly lift the mast (2) while taking up the load.
- Bring the load into the transport position.
- Tilt the load far enough backwards to ensure stability (loss of load on braking or going downhill).

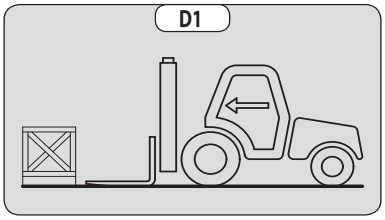

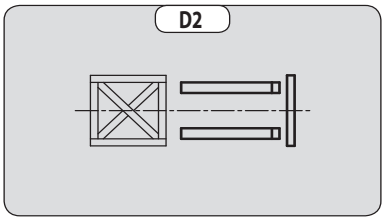

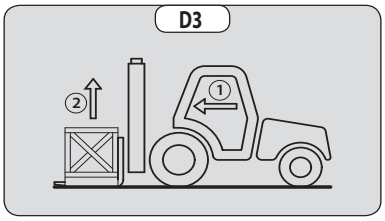

FOR A NON-PALLETISED LOAD

- Tilt the carriage (1) forwards and move the lift truck slowly forwards (2), to insert the fork under the load (fig. D4) (block the load if necessary).
- Continue to move the lift truck forwards (2) tilting the carriage (3) (fig. D4) backwards to position the load on the forks and check the load's longitudinal and lateral stability.

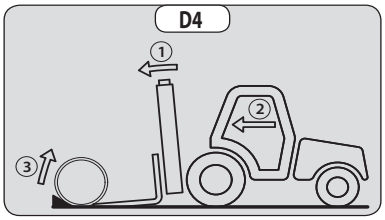

PICKING UP AND LAYING DOWN A HIGH LOAD ON TIRES

⚠ IMPORTANT ⚠

You must not raise the boom if you have not checked the transverse attitude of the lift truck (◁ INSTRUCTIONS FOR HANDLING A LOAD).

REMINDER: Make sure that the following operations can be performed with good visibility (◁ OPERATION INSTRUCTIONS UNLADEN AND LADEN).

PICKING UP A HIGH LOAD ON TIRES

- Ensure that the forks will easily pass under the load.
- Keeping the mast vertical (1), advance the lift truck and raise the forks to level with the load (2) (fig. E1).
- Manoeuvre carefully and gently to bring the forks to the stop in front of the load (fig. E2). Set the handbrake and place the forward/reverse selector to neutral.

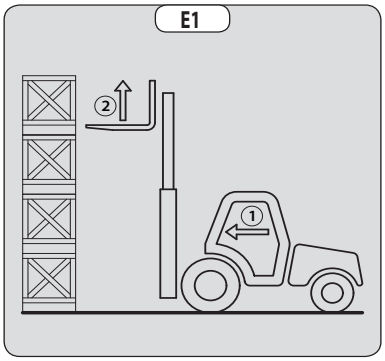

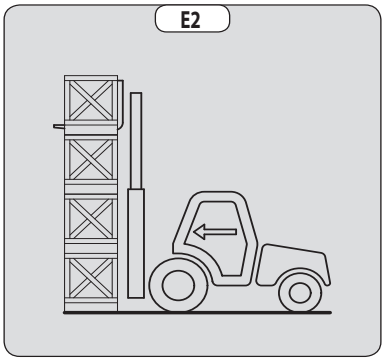

647690 (29/01/2019)
MC . . D K ST3A S1 / MSI . . D K ST3A S5

- Slightly raise the load (1) and tilt the carriage (2) backwards to stabilise the load (fig. F3).
- Tilt the load sufficiently backwards to ensure its stability.
- Reverse the lift truck (1) very carefully and gently to free the load. Lower the mast (2) to bring the load into transport position (fig. E4).

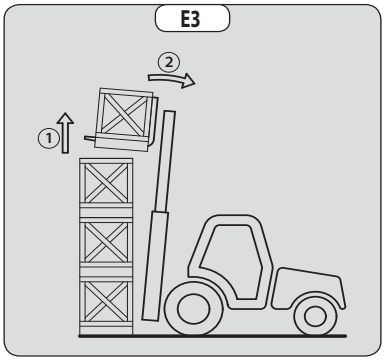

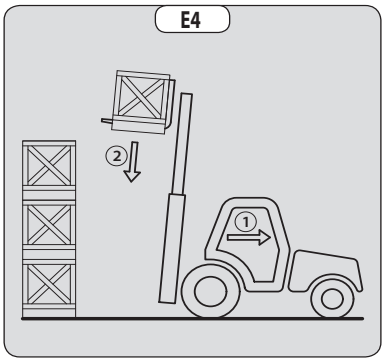

LAYING A HIGH LOAD ON TYRES

- Approach the load in the transport position in front of the pile (fig. E5).
- Raise the mast (1) until the load is higher than the pile and move the lift truck forward (2) (fig. E6) very carefully and gently, until the load is over the pile. Put the handbrake on and set the forward/reverse selector to neutral.
- Place the load in a horizontal position by tilting the mast forwards (1) and lay it down on the pile (2) while checking the correct positioning of the load (fig. E7).
- Reverse the lift truck (1) very slowly and carefully to release the forks (fig. E8). Then set them into transport position.

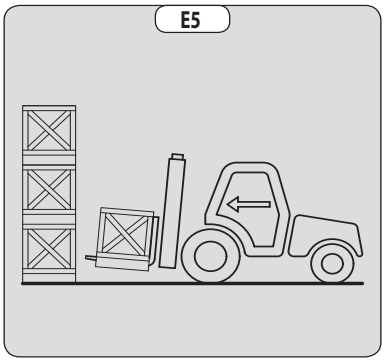

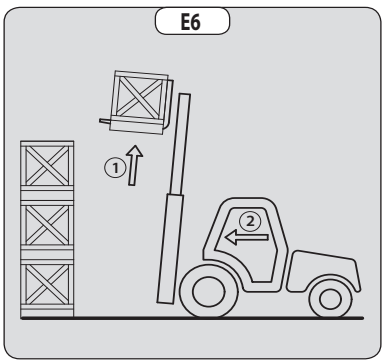

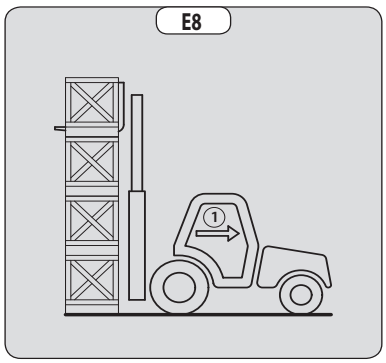

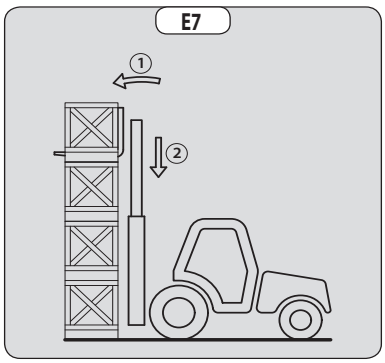

647690 (29/01/2019)
MC.. DK ST3A S1 / MSI.. DK ST3A S5

LIFT TRUCK MAINTENANCE INSTRUCTIONS

GENERAL INSTRUCTIONS

- Ensure the area is sufficiently ventilated before starting the lift truck.
- Wear clothes suitable for the maintenance of the lift truck, avoid wearing jewellery and loose clothes. Tie back and protect your hair, if necessary.
- Before carrying out any work on the lift truck:
  - Switch off the engine
  - Apply the parking brake.
  - Remove the ignition key.
- Read the operator's manual carefully.
- Carry out all repairs immediately, even if the repairs concerned are minor.
- Repair all leaks immediately, even if the leak concerned is minor.
- Ensure that process materials and of spare parts are disposed in all safely and in an ecological manner.
- Be careful of the risk of burning and splashing (exhaust, radiator, engine, etc.).

MAINTENANCE

- Perform the periodic service (◅ 3 - MAINTENANCE) to keep your lift truck in good working condition. Failure to perform the periodic service may cancel the contractual guarantee.

MAINTENANCE LOGBOOK

- The maintenance operations carried out in accordance with the recommendations given in part: 3 - MAINTENANCE and the other inspection, servicing or repair operations or modifications performed on the lift truck or its attachments shall be recorded in a maintenance logbook. The entry for each operation shall include details of the date of the works, the names of the individuals or companies having performed them, the type of operation and its frequency, if applicable. The part numbers of any lift truck items replaced shall also be indicated.

LUBRICANT AND FUEL LEVELS

- Use the recommended lubricants (never use contaminated lubricants).
- Do not fill the fuel tank when the engine is running.
- Only fill up the fuel tank in areas specified for this purpose.
- Do not fill the fuel tank to the maximum level.
- Do not smoke or approach the lift truck with a flame, when the fuel tank is open or is being filled.

HYDRAULICS

- Any work on the load handling hydraulic circuit is forbidden except for the operations described in part: 3 - MAINTENANCE.
- Do not attempt to loosen connections, hoses or a hydraulic component with the circuit under pressure.

⚠ IMPORTANT ⚠

It is dangerous to change the setting and remove the BALANCING VALVES or SAFETY VALVES which may be fitted to your lift truck cylinders.

The HYDRAULIC ACCUMULATORS that may be fitted on your lift truck are pressurised units.
Removing these accumulators and their pipework is dangerous.

Such operations must only be performed by approved personnel (consult your dealer).

ELECTRICITY

- Do not short-circuit the starter relay to start the engine. If the forward/reverse selector is not in neutral and the parking brake is not applied, the lift truck may suddenly start to move.
- Do not place metal items on the battery.
- Disconnect the battery before working on the electrical circuit.

647690 (29/01/2019)
MC . . D K ST3A S1 / MSI . . D K ST3A S5

WELDING

- Disconnect the battery before any welding operations on the lift truck.
- When carrying out electric welding work on the lift truck, connect the negative cable from the equipment directly to the part being welded, so as to avoid high tension current passing through the alternator.
- Never carry out welding or work which gives off heat on an assembled tire. The heat would increase the pressure which could cause the tire to explode.
- If the lift truck is equipped with an electronic control unit, disconnect this before starting to weld, to avoid the risk of causing irreparable damage to electronic components.

WASHING THE LIFT TRUCK

- Clean the lift truck or at least the area concerned before any intervention.
- Remember to close and lock all accesses to the lift truck (doors, windows, cowls…).
- During washing, avoid the articulations and electrical components and connections.
- If necessary, protect against penetration of water, steam or cleaning agents, components susceptible of being damaged, particularly electrical components and connections and the injection pump.
- Clean the lift truck of any fuel, oil or grease trace.

TRANSPORTING THE LIFT TRUCK

⚠ IMPORTANT ⚠

Transporting the lift truck involves real risks for the operator and others involved.

- Towing, slinging or transporting the lift truck (◅ 3 - MAINTENANCE).

647690 (29/01/2019)
MC . . D K ST3A S1 / MSI . . D K ST3A S5

IF THE LIFT TRUCK IS NOT TO BE USED FOR A LONG TIME

INTRODUCTION

The following recommendations are intended to prevent the lift truck from being damaged when it is withdrawn from service for an extended period.

⚠ IMPORTANT ⚠

Procedures to follow if the lift truck is not to be used for a long time and for starting it up again afterwards must be performed by your dealership. This long-term storage period must not exceed 12 months.

PREPARING THE LIFT TRUCK

- Clean the lift truck thoroughly.
- Check and repair any leakage of fuel, oil, water or air.
- Replace or repair any worn or damaged parts.
- Wash the painted surfaces of the lift truck in clear and cold water and wipe them.
- Touch up the paintwork if necessary.
- Shut down the lift truck (◅ OPERATING INSTRUCTIONS UNLADEN AND LADEN).
- Make sure the mast cylinder rods are all in retracted position.
- Release the pressure in the hydraulic circuits.

DEF (Diesel Exhaust Fluid) TANK

Depending on the model of lift truck

- Empty and rinse the "DEF" tank.
- Replace the "DEF" (Diesel Exhaust Fluid) feed pump filter (◅ 3 - MAINTENANCE).
- Fill up with new "DEF" (Diesel Exhaust Fluid) (◅ 2 - DESCRIPTION).
- Start up the lift truck to pressurise the circuit and bring it up to working temperature.
- Switch off the engine.
- Check the "DEF" level and top up if required.

PROTECTING THE ENGINE

- Contact your dealer to obtain the procedure for protecting the inside of the engine (use of protection product).
- Fill the tank with fuel (◅ 3 - MAINTENANCE).
- Replace the coolant (◅ 3 - MAINTENANCE).
- Leave the engine running at idling speed for a few minutes, then switch off.
- Replace the engine oil and oil filter (◅ 3 - MAINTENANCE).
- Run the engine for a short time so that the oil and coolant circulate inside.
- Disconnect the battery and store it in a safe place away from the cold, after charging it to a maximum.
- Block the outlet with waterproof adhesive tape.
- Remove the drive belts and store them in a safe place.
- Disconnect the engine cut-off solenoid on the injection pump and carefully insulate the connection.

PROTECTING THE LIFT TRUCK

- Set the lift truck on axle stands so that the tyres are not in contact with the ground and release the parking brake.
- Protect cylinder rods which will not be retracted, from corrosion.
- Wrap the tyres.

NOTE: If the lift truck is to be stored outdoors, cover it with a waterproof tarpaulin.

647690 (29/01/2019)
MC . . D K ST3A S1 / MSI . . D K ST3A S5

BRINGING THE LIFT TRUCK BACK INTO SERVICE

- Remove the waterproof adhesive tape from all the holes.
- Refit and reconnect the battery.
- Remove the protection from the cylinder rods.
- Perform the daily maintenance operations (◅ 3 - MAINTENANCE).
- Put the handbrake on and remove the axle stands.
- Drain and clean the fuel tank (◅ 3 - MAINTENANCE).
- Fill the fuel tank with clean diesel filtered through the filler port.
- Replace the fuel filter (◅ 3 - MAINTENANCE).
- Replace the fuel pre-filter (◅ 3 - MAINTENANCE) (depending on the model of lift truck)
- Drain and rinse the DEF tank (depending on the model of lift truck)
- Top up, slowly fill the tank with new "DEF" (Diesel Exhaust Fluid) up to the bottom of the filler neck (depending on the model of lift truck)
- Refit the drive belts and adjust the tension (◅ 3 - MAINTENANCE).
- Turn the engine over with the starter, to allow the oil pressure to rise.
- Reconnect the engine cut-off solenoid.
- Lubricate the lift truck completely (◅ 3 - MAINTENANCE).

⚠ IMPORTANT ⚠

Ensure the area is sufficiently ventilated before starting the lift truck.

- Start up the lift truck, following the safety instructions and regulations (◅ OPERATING INSTRUCTIONS UNLADEN AND LADEN).
- Run all the jib's hydraulic movements, concentrating on the ends of travel for each cylinder.

647690 (29/01/2019)
MC . . D K ST3A S1 / MSI . . D K ST3A S5

LIFT TRUCK DISPOSAL

⚠ IMPORTANT ⚠

Please consult your dealer before disposing of your lift truck.

RECYCLING OF MATERIALS

METALS

- Metals are 100% recoverable and recyclable.

PLASTICS

- Plastic parts are identified with a marking in accordance with current regulations.
- A limited range of materials is used to simplify the recycling process.
- The majority of plastic components are made of "thermoplastic" plastics, which are easily recycled by melting, granulating or grinding.

RUBBER

- Tyres and seals can be ground for use in cement manufacture or to obtain reusable granules.

GLASS

- Glass items can be removed and collected for processing by glaziers.

ENVIRONMENTAL PROTECTION

By entrusting the maintenance of your lift truck to the MANITOU network, the risk of pollution is limited and the contribution to environmental protection contribution is made.

WORN OR DAMAGED PARTS

- Do not dump them in the countryside.
- MANITOU and its network have signed-up to a scheme of environmental protection through recycling.

USED OIL

- The MANITOU network organises the collection and processing of used oil.
- By handing over your waste oil to MANITOU, the risk of pollution is limited.

USED BATTERIES

- Do not throw away batteries, as they contain metals that are harmful for the environment.
- Return them to the MANITOU network or any other approved collection point.

NOTE: MANITOU aims to manufacture lift trucks that provide the best performance and limit polluting emissions.

647690 (29/01/2019)
MC . . D K ST3A S1 / MSI . . D K ST3A S5

2 - DESCRIPTION

647690 (29/01/2019)
MC . . D K ST3A S1 / MSI . . D K ST3A S5

647690 (29/01/2019)
MC.. DK ST3A S1 / MSI.. DK ST3A S5

2 - DESCRIPTION

DECLARATION "CE" OF CONFORMITY 4

SAFETY PLATES AND STICKERS 6

IDENTIFICATION OF THE LIFT TRUCK 8

CHARACTERISTICS MC 25-2 D K ST3A S1 MC 30-2 D K ST3A S1 10

CHARACTERISTICS MC 25-4 D K ST3A S1 MC 30-4 D K ST3A S1 12

CHARACTERISTICS MSI 25 D K ST3A S5 MSI 30 D K ST3A S5 MSI 35 D K ST3A S5 14

CHARACTERISTICS OF MASTS AND LOAD CHARTS MC 25-2 D K ST3A S5 MC 25-4 D K ST3A S5 16

CHARACTERISTICS OF MASTS AND LOAD CHARTS MC 30-2 D K ST3A S5 MC 30-4 D K ST3A S5 18

CHARACTERISTICS OF MASTS AND LOAD CHARTS MSI 25 D K ST3A S5 20

CHARACTERISTICS OF MASTS AND LOAD CHARTS MSI 30 D K ST3A S5 22

CHARACTERISTICS OF MASTS AND LOAD CHARTS MSI 35 D K ST3A S5 24

TYRES 26

INSTRUMENTS AND CONTROLS 30

SLINGING AND SECURING PIN 52

DECLARATION "CE" OF CONFORMITY

1) DÉCLARATION «CE» DE CONFORMITÉ (originale)
«EC» DECLARATION OF CONFORMITY (original)

2) La société, *The company* : **MANITOU BF**

3) Adresse, *Address* : **430, rue de l'Aubinière - BP 10249 - 44158 - ANCENIS CEDEX - FRANCE**

4) Dossier technique, *Technical file* : **MANITOU BF - 430, rue de l'Aubinière**
BP 10249 - 44158 - ANCENIS CEDEX - FRANCE

5) Constructeur de la machine décrite ci-après, *Manufacturer of the machine described below* :

MC 25-2 D K ST3A S1
MC 25-4 D K ST3A S1
MC 30-2 D K ST3A S1
MC 30-4 D K ST3A S1
MSI 25 D K ST3A S5
MSI 30 D K ST3A S5
MSI 35 D K ST3A S5

6) Déclare que cette machine, *Declares that this machine* :

7) Est conforme aux directives suivantes et à leurs transpositions en droit national,
Complies with the following directives and their transpositions into national law :

2006/42/CE

8) Pour les machines annexe IV, *For annex IV machines* :
9) Numéro d'attestation, *Certificate number* :
10) Organisme notifié, *Notified body* :

15) Normes harmonisées utilisées, *Harmonised standards used* :

16) Normes ou dispositions techniques utilisées, *Standards or technical provisions used* :

17) Fait à, *Done at* : **18)** Date, *Date* :

19) Nom du signataire, *Name of signatory* :

20) Fonction, *Function* :

21) Signature, *Signature* :

SPECIMEN

647690 (29/01/2019)
MC . . D K ST3A S1 / MSI . . D K ST3A S5

bg : 1) удостоверение за « CE » съответствие (оригинална), 2) Фирмата, 3) Адрес, 4) Техническо досие, 5) Фабрикант на описаната по-долу машина, 6) Обявява, че тази машина, 7) Отговаря на следните директиви и на тяхното съответствие национално право, 8) За машините към допълнение IV, 9)Номер на удостоверението, 10) Наименувана фирма, 15) хармонизирани стандарти използвани, 16) стандарти или технически правила, използвани, 17) Изработено в, 18) Дата, 19) Име на разписалия се, 20) Функция, 21) Функция.

cs : 1) ES prohlášení o shodě (původní), 2) Název společnosti, 3) Adresa, 4) Technická dokumentace, 5) Výrobce níže uvedeného stroje, 6) Prohlašuje, že tento stroj, 7) Je v souladu s následujícími směrnicemi a směrnicemi transponovanými do vnitrostátního práva, 8) Pro stroje v příloze IV, 9) Číslo certifikátu, 10) Notifikační orgán, 15) harmonizované normy použity, 16) Norem a technických pravidel používaných, 17) Místo vydání, 18) Datum vydání, 19) Jméno podepsaného, 20) Funkce, 21) Podpis.

da : 1) EF Overensstemmelseserklæring (original), 2) Firmaet, 3) Adresse, 4) tekniske dossier, 5) Konstruktør af nedenfor beskrevne maskine, 6) Erklærer, at denne maskine, 7) Overholder nedennævnte direktiver og disses gennemførelse til national ret, 8) For maskiner under bilag IV, 9) Certifikat nummer, 10) Bemyndigede organ, 15) harmoniserede standarder, der anvendes, 16) standarder eller tekniske regler, 17) Udfærdiget i, 18) Dato, 19) Underskrivers navn, 20) Funktion, 21) Underskrift.

de : 1) EG-Konformitätserklärung (original), 2) Die Firma, 3) Adresse, 4) Technischen Unterlagen, 5) Hersteller der nachfolgend beschriebenen Maschine, 6) Erklärt, dass diese Maschine, 7) den folgenden Richtlinien und deren Umsetzung in die nationale Gesetzgebung entspricht, 8) Für die Maschinen laut Anhang IV, 9) Bescheinigungsnummer, 10) Benannte Stelle, 15) angewandten harmonisierten Normen, 16) angewandten sonstigen technischen Normen und Spezifikationen, 17) Ausgestellt in, 18) Datum, 19) Name des Unterzeichners, 20) Funktion, 21) Unterschrift.

el : 1) Δήλωση συμμόρφωσης CE (πρωτότυπο), 2) Η εταιρεία, 3) Διεύθυνση, 4) τεχνικό φάκελο, 5) Κατασκευάστρια του εξής περιγραφόμενου μηχανήματος, 6) Δηλώνει ότι αυτό το μηχάνημα, 7) Είναι σύμφωνο με τις εξής οδηγίες και τις προσαρμογές τους στο εθνικό δίκαιο, 8) Για τα μηχανήματα παραρτήματος IV, 9) Αριθμός δήλωσης, 10) Κοινοποιημένος φορέας, 15) εναρμονισμένα πρότυπα που χρησιμοποιούνται, 16) Πρότυπα ή τεχνικούς κανόνες που χρησιμοποιούνται, 16) Είναι σύμφωνο με τα εξής πρότυπα και τεχνικές διατάξεις, 17) Εν, 18) Ημερομηνία, 19) Όνομα του υπογράφοντος, 20) Θέση, 21) Υπογραφή.

es : 1)Declaración DE de conformidad (original), 2) La sociedad, 3) Dirección, 4) expediente técnico, 5) Constructor de la máquina descrita a continuación, 6) Declara que esta máquina, 7) Está conforme a las siguientes directivas y a sus transposiciones en derecho nacional, 8) Para las máquinas anexo IV, 9) Número de certificación, 10) Organismo notificado, 15) normas armonizadas utilizadas, 16) Otras normas o especificaciones técnicas utilizadas, 17) Hecho en, 18) Fecha, 19) Nombre del signatario, 20) Función, 21) Firma.

et : 1) EÜ vastavusdeklaratsioon (algupärane), 2) Äriühing, 3) Aadress, 4) Tehniline dokumentatsioon, 5) Seadme tootja, 6) Kinnitab, et see toode, 7) On vastavuses järgmiste direktiivide ja nende riigisisesesse õigusesse ülevõtmiseks vastuvõetud õigusaktidega, 8) IV lisas loetletud seadmete puhul, 9) Tunnistuse number, 10) Sertifitseerimisasutus, 15) kasutatud ühtlustatud standarditele, 16) Muud standardites või spetsifikatsioonides kasutatakse, 17) Väljaandmise koht, 18) Väljaandmise aeg, 19) Allkirjastaja nimi, 20) Amet, 21) Allkiri.

fi : 1) EY-vaatimustenmukaisuusvakuutus (alkuperäiset), 2) Yritys, 3) Osoite, 4) teknisen eritelmän, 5) Jäljessä kuvatun koneen valmistaja, 6) Vakuuttaa, että tämä kone, 7) Täyttää seuraavien direktiivien sekä niitä vastaavien kansallisten säännösten vaatimukset, 8) Liitteen IV koneiden osalta, 9) Todistuksen numero, 10) Ilmoitettu laitos, 15) yhdenmukaistettuja standardeja käytetään, 16) muita standardeja tai eritelmät, 17) Paikka, 18) Aika, 19) Allekirjoittajan nimi, 20) Toimi, 21) Allekirjoitus.

ga : 1) « EC »dearbhú comhréireachta (bunaidh), 2) An comhlacht, 3) Seoladh, 4) comhad teicniúil, 5) Déantóir an innill a thuairiscítear thíos, 6) Dearbhaíonn sé go bhfuil an t-inneall, 7) Go gcloíonn sé le na treoracha seo a leanas agus a trasuímh isteach i ndlí náisiúnta, 8) Le haghaidh innill an aguisín IV, 9) Uimhir teastais, 10) Comhlacht a chuireadh i bhfios, 15) caighdeáin comhchuibhithe a úsáidtear, 16) caighdeáin eile nó sonraíochtaí teicniúla a úsáidtear, 17) Déanta ag, 18) Dáta, 19) Ainm an tsínitheora, 20) Feidhm, 21) Síniú.

hu : 1) CE megfelelőségi nyilatkozat (eredeti), 2) A vállalat, 3) Cím, 4) műszaki dokumentáció, 5) Az alábbi gép gyártója, 6) Kijelenti, hogy a gép, 7) Megfelel az alábbi irányelveknek valamint azok honosított előírásainak, 8) A IV. melléklet gépeihez, 9) Bizonylati szám, 10) Értesített szervezet, 15) felhasznált harmonizált szabványok, 16) egyéb felhasznált műszaki szabványok és előírások hivatkozásai, 17) Kelt (hely), 18) Dátum, 19) Aláíró neve, 20) Funkció, 21) Aláírás.

is : 1) (Samræmisvottorð ESB (upprunalega), 2) Fyrirtækið, 3) Aðsetur, 4) Tæknilegar skrá, 5) Smiður tækisins sem lýst er hér á eftir, 6) Staðfestir að tækið, 7) Samræmist eftirfarandi stöðlum og staðfærslu þeirra með hliðsjón af þjóðarrétti, 8) Fyrir tækin í aukakafla IV, 9) Staðfestingarnúmer, 10) Tilkynnt til, 15) samhæfða staðla sem notaðir, 16) önnur staðlar eða forskriftir notað, 17) Staður, 18) Dagsetning, 19) Nafn undirritaðs, 20) Staða, 21) Undirskrift.

it : 1) Dichiarazione CE di conformità (originale), 2) La società, 3) Indirizzo, 4) fascicolo tecnico, 5) Costruttore della macchina descritta di seguito, 6) Dichiara che questa macchina, 7) È conforme alle direttive seguenti e alle relative trasposizioni nel diritto nazionale, 8) Per le macchine Allegato IV, 9) Numero di Attestazione, 10) Organismo notificato, 15) norme armonizzate applicate, 16) altre norme e specifiche tecniche applicate, 17) Stabilita a, 18) Data, 19) Nome del firmatario, 20) Funzione, 21) Firma.

lt : 1) CE atitikties deklaracija (originalas), 2) Bendrovė, 3) Adresas, 4) Techninė byla, 5) Žemiau nurodytas įrenginio gamintojas, 6) Pareiškia, kad šis įrenginys, 7) Atitinka toliau nurodytas direktyvas ir į nacionalinius teisės aktus perkeltas jų nuostatas, 8) IV priedas dėl mašinų, 9) Sertifikato Nr, 10) Paskelbtoji įstaiga, 15) suderintus standartus naudojamus, 16) Kiti standartai ir techninės specifikacijas, 17) Pasirašyta, 18) Data, 19) Pasirašiusio asmens vardas ir pavardė, 20) Pareigos, 21) Parašas.

lv : 1) EK atbilstības deklarācija (oriģināls), 2) Uzņēmums, 3) Adrese, 4) tehniskās lietas, 5) Tālāk aprakstītās iekārtas ražotājs, 6) Apliecina, ka šī iekārta, 7) Ir atbilstoša tālāk norādītajām direktīvām un to transpozīcijai nacionālajā likumdošanā, 8) Iekārtām IV pielikumā, 9) Apliecības numurs, 10) Reģistrētā organizācija, 15) lietotajiem saskaņotajiem standartiem, 16) lietotajiem tehniskajiem standartiem un specifikācijām, 17) Sastādīts, 18) Datums, 19) Parakstītāja vārds, 20) Amats, 21) Paraksts.

mt : 1) Dikjarazzjoni ta' Konformità KE (oriġinali), 2) Il-kumpanija, 3) Indirizz, 4) fajl tekniku, 5) Manifattriċi tal-magna deskritta hawn isfel, 6) Tiddikjara li din il-magna, 7) Hija konformi hija konformi mad-Direttivi segwenti u l-liġijiet li jimplimentawhom fil-liġi nazzjonali, 8) Għall-magni fl-Anness IV, 9) Numru taċ-ċertifikat, 10) Entità nnotifikata, 15) l-istandards armonizzati użati, 16) standards tekniċi u speċifikazzjonijiet oħra użati, 17) Magħmul f', 18) Data, 19) Isem il-firmatarju, 20) Kariga, 21) Firma.

nl : 1) EG-verklaring van overeenstemming (oorspronkelijke), 2) Het bedrijf, 3) Adres, 4) technisch dossier, 5) Constructeur van de hierna genoemde machine, 6) Verklaart dat deze machine, 7) In overeenstemming is met de volgende richtlijnen en hun omzettingen in het nationale recht, 8) Voor machines van bijlage IV, 9) Goedkeuringsnummer, 10) Aangezegde instelling, 15) gehanteerde geharmoniseerde normen, 16) andere gehanteerde technische normen en specificaties, 17) Opgemaakt te, 18) Datum, 19) Naam van ondergetekende, 20) Functie, 21) Handtekening.

no : 1) CE-samsvarserklæring (original), 2) Selskapet, 3) Adresse, 4) tekniske arkiv, 5) Fabrikant av følgende maskin, 6) Erklærer at denne maskinen, 7) Oppfyller kravene i følgende direktiver, med nasjonale gjennomføringsbestemmelser, 8) For maskinene i tillegg IV, 9) Attestnummer, 10) Notifisert organ, 15) harmoniserte standarder som brukes, 16) Andre standarder og spesifikasjoner brukt, 17) Utstedt i, 18) Dato, 19) Underskriverens navn, 20) Stilling, 21) Underskrift.

pl : 1) Deklaracja zgodności CE (oryginalne), 2) Spółka, 3) Adres, 4) dokumentacji technicznej, 5) Wykonawca maszyny opisanej poniżej, 6) Oświadcza, że ta maszyna, 7) Jest zgodna z następującymi dyrektywami i odpowiadającymi przepisami prawa krajowego, 8) Dla maszyn załącznik IV, 9) Numer certyfikatu, 10) Jednostka certyfikująca, 15) zastosowanych norm zharmonizowanych, 16) innych zastosowanych norm technicznych i specyfikacji, 17) Sporządzono w, 18) Data, 19) Nazwisko podpisującego, 20) Stanowisko, 21) Podpis.

pt : 1) Declaração de conformidade CE (original), 2) A empresa, 3) Morada, 4) processo técnico, 5) Fabricante da máquina descrita abaixo, 6) Declara que esta máquina, 7) Está em conformidade às directivas seguintes e às suas transposições para o direito nacional, 8) Para as máquinas no anexo IV, 9) Número de certificado, 10) Entidade notificada, 15) normas harmonizadas utilizadas, 16) outras normas e especificações técnicas utilizadas, 17) Elaborado em, 18) Data, 19) Nome do signatário, 20) Cargo, 21) Assinatura.

ro : 1) Declarație de conformitate CE (originală), 2) Societatea, 3) Adresa, 4) cărtii tehnice, 5) Constructor al mașinii descrise mai jos, 6) Declară că prezenta mașină, 7) Este conformă cu directivele următoare și cu transpunerea lor în dreptul național, 8) Pentru mașinile din anexa IV, 9) Număr de atestare, 10) Organism notificat, 15) standardele armonizate utilizate, 16) alte standarde si specificatii tehnice utilizate, 17) Întocmit la, 18) Data, 19) Numele persoanei care semnează, 20) Funcția, 21) Semnătura.

sk : 1) ES vyhlásenie o zhode (pôvodný), 2) Názov spoločnosti, 3) Adresa, 4) technickej dokumentácie, 5) Výrobca nižšie opísaného stroja, 6) Vyhlasuje, že tento stroj, 7) Je v súlade s nasledujúcimi smernicami a smernicami transponovanými do vnútroštátneho práva, 8) Pre stroje v prílohe IV, 9) Číslo certifikátu, 10) Notifikačný orgán, 15) použité harmonizované normy, 16) použité iné technické normy a predpisy, 17) Miesto vydania, 18) Dátum vydania, 19) Meno podpisujúceho, 20) Funkcia, 21) Podpis.

sl : 1) ES Izjava o ustreznosti (izvirna), 2) Družba. 3) Naslov. 4) tehnične dokumentacije, 5) Proizvajalac tukaj opisanega stroja, 6) Izjavlja, da je ta stroj, 7) Ustreza naslednjim direktivam in njihovi transpoziciji v državno pravo, 8) Za stroje priloga IV, 9) Številka potrdila, 10) Obvestilo organu, 15) uporabljene harmonizirane standarde, 16) druge uporabljene tehnične standarde in zahteve, 17) V, 18) Datum, 19) Ime podpisnika, 20) Funkcija, 21) Podpis.

sv : 1) CE-försäkran om överensstämmelse (original), 2) Företaget, 3) Adress, 4) tekniska dokumentationen, 5) Konstruktör av nedan beskrivna maskin, 6) Försäkrar att denna maskin, 7) Överensstämmer med nedanstående direktiv och införlivandet av dem i nationell rätt, 8) För maskinerna i bilaga IV, 9) Nummer för godkännande, 10) Organism som underrättats, 15) Harmoniserade standarder som använts, 16) andra tekniska standarder och specifikationer som använts, 17) Upprättat i, 18) Datum, 19) Namn på den som undertecknat, 20) Befattning, 21) Namnteckning.

647690 (29/01/2019)
MC . . D K ST3A S1 / MSI . . D K ST3A S5

SAFETY PLATES AND STICKERS

⚠ IMPORTANT ⚠

Clean all the stickers and safety plates to make them legible.
It is essential to replace stickers and safety plates which are illegible or damaged.
Check the presence of stickers and safety plates after replacing any spare parts.

EXTERNAL PLATES AND STICKERS

REF.	PART NO.	DESCRIPTION
1	24653	- Slinging point
2	234802	- Diesel

STICKERS AND PLATES UNDER THE ENGINE HOOD

REF.	PART NO.	DESCRIPTION
3	293887	- Anti-freeze
4	234798	- Hydraulic oil
5	719889	- Periodic service

STICKERS AND PLATES IN THE CAB

REF.	PART NO.	DESCRIPTION
6	253267	- Manipulator function
7	172385	- Towing forbidden
8	300681	- Safety instruction
9	Consult your dealer	- Load chart (according to model) *
10	Consult your dealer	- Manufacturer's plate
11	239594	- Sound power level 104dB

* The load chart referred to in the notice is a standard or blank chart. Each lift truck which can be used with an attachment has a specific chart. To obtain this, consult your dealer.

647690 (29/01/2019)
MC.. DK ST3A S1 / MSI.. DK ST3A S5

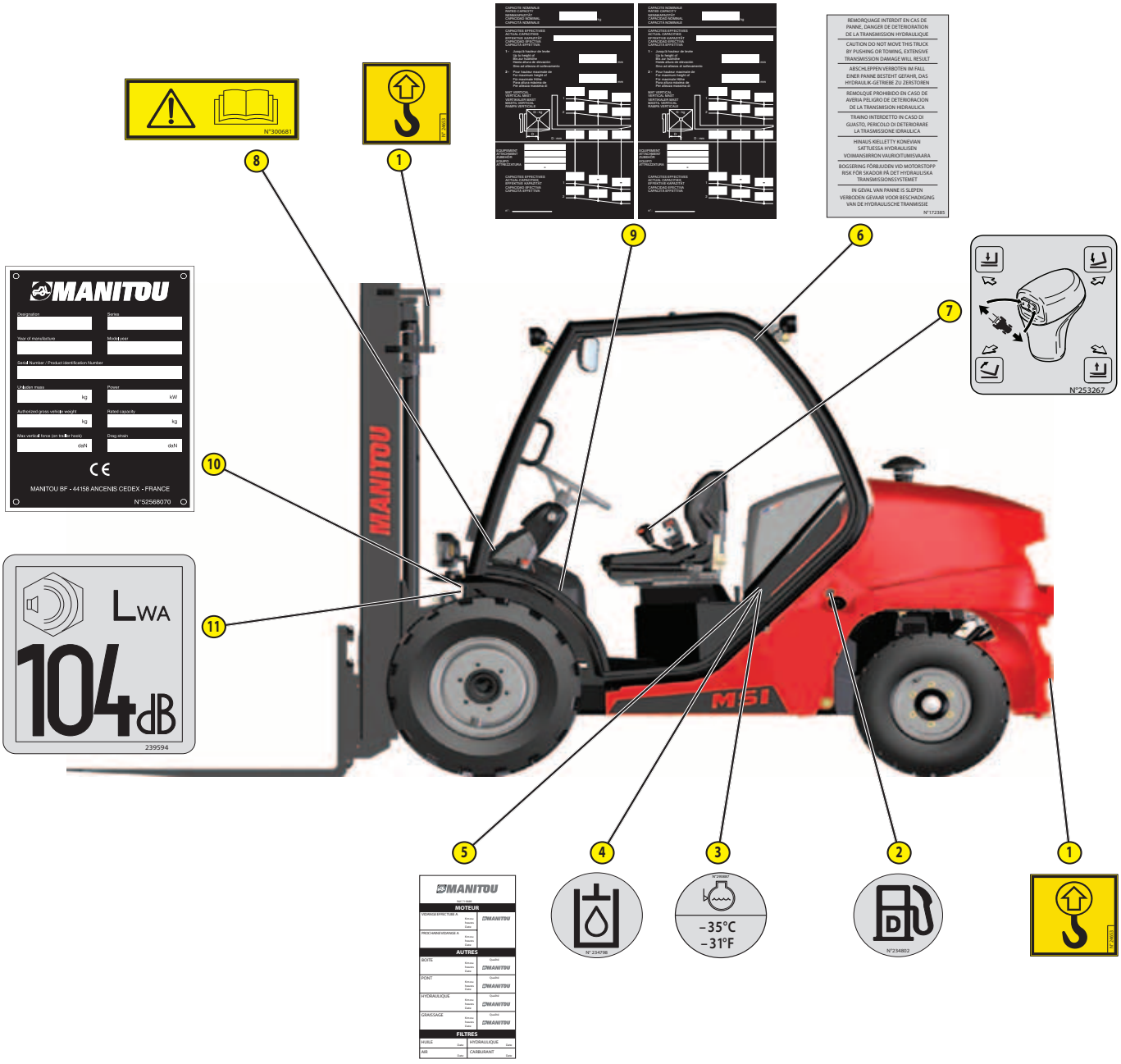

647690 (29/01/2019)
MC . . D K ST3A S1 / MSI . . D K ST3A S5

IDENTIFICATION OF THE LIFT TRUCK

As our policy is to promote a constant improvement in our products, our range of lift trucks may undergo certain modifications, without any obligation for us to advise our customers.

When you order parts, or when you require any technical information, always specify the following information.

NOTE: For the owner's convenience, it is recommended that a note of these numbers is made in the spaces provided, at the time of the delivery of the lift truck.

For any further technical information regarding your lift truck refer to: CHARACTERISTICS.

LIFT TRUCK MANUFACTURER'S PLATE

"Designation" Designation	
"Series" Series	
"Year of manufacture" Year of manufacture	
"Model year" Model year	
"Serial Number / Product Identification Number" Serial number/Product identification number	
"Unladen mass" Unladen mass	
"Power" Power	
"Authorized gross vehicle weight" Authorised gross vehicle weight	
"Rated capacity" Rated capacity	
"Max vertical force (on trailer hook)" Maximum vertical force (on trailer hook)	
"Drag strain" Drag strain	

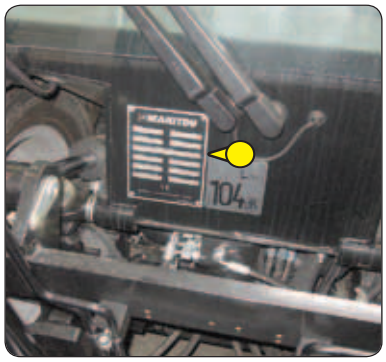

ATTACHMENT MANUFACTURER'S PLATE

"MODELE" Model	
"N° série" Serial number	
"Année Fabrication" Year of manufacture	
"Masse à vide" Unladen mass	
"Centre de gravité" Centre of gravity	
"Capacité Nominale" Rated capacity	
"Pression service" Working pressure	

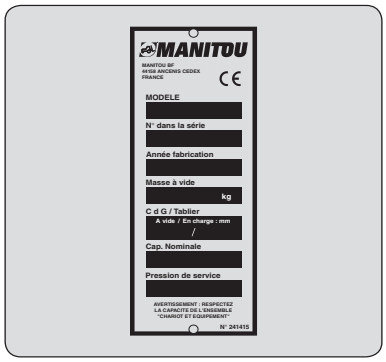

ENGINE

Model	
"Serial No." Serial number	
"Code No." Supplier code number	

HYDROSTATIC PUMP

"CNR" MANITOU part No.	
"TYP" Type of pump	
"MNR" Identification number	
"SN" Serial number	
"FD"	
"Rotation" Rotation	
"n" Maximum rotation speed when laden	
"P" Power	

FRONT WHEEL ELECTRIC MOTORS

MANITOU part No.	
"N" Serial number	
Supplier code	

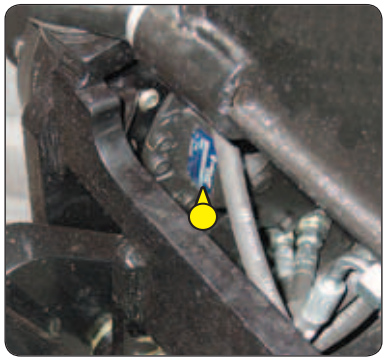

REAR WHEEL HYDROSTATIC MOTORS

Only for MC . . -4 D

MANITOU part No.	
"N" Serial number	
Supplier code	

OVERHEAD GUARD / CAB

"PN" MANITOU part No.	
"ID" Supplier reference	
"DATE" Date of manufacture	
"SUPPLIER" Supplier code	

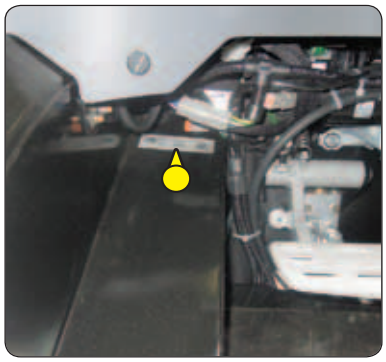

MASTS WITH ROLLERS

MANITOU part No.	

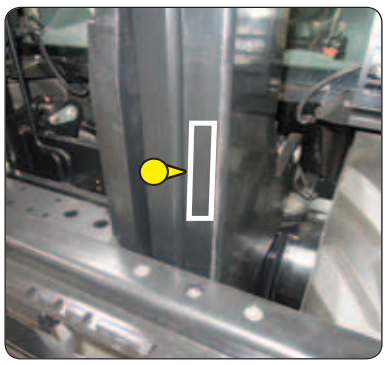

FRAME

Serial number/Product identification number	

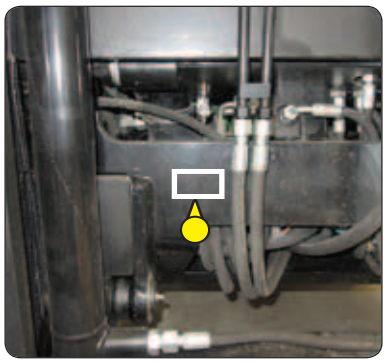

CHARACTERISTICS MC 25-2 D K ST3A S1 MC 30-2 D K ST3A S1

NOTE: The specifications given are not binding on the manufacturer and can be modified without prior notification.

DESIGNATION	1.1	Manufacturer		MANITOU	
	1.2	Model type / Serial no.		MC 25-2 D K ST3A S1	MC 30-2 D K ST3A S1
	1.3	Propulsion: battery, diesel, petrol, LPG, mains		Diesel	
	1.4	Type of operation: manual, pedestrian, standing, seated		Seated	
	1.5	Rated capacity/load on forks (basic capacity)	Q (t)	2.5	3.0
	1.6	Centre of gravity of load	c (mm)	500	
	1.8	Distance from the load bearing surface to the centre of the front axle	x (mm)	621	626
	1.9	Wheelbase	y (mm)	1900	
WEIGHT	2.1	Weight of truck in working order	kg	3875	4355
	2.2	Front axle load laden	kg	5510	6435
	2.2.1	Rear axle load laden	kg	865	920
	2.3	Front axle load unladen	kg	1533	1660
	2.3.1	Rear axle load unladen	kg	2342	2695
RUNNING CARRIAGE	3.1	Tyre equipment : bandage (V), super-elastic (SE), pneumatic (L)		L	
	3.2	Size of front wheels	" or mm	12.5/80-18/12 SL R4	
	3.3	Size of rear wheels	" or mm	7.00-12/12 ED PLUS	
	3.5	Number of front wheels (x = drive wheel)		2x	
	3.5.1	Number of rear wheels (x = drive wheel)		2	
	3.6	Front track (middle of wheels)	b10 (mm)	1159	
	3.7	Rear track (middle of wheels)	b11 (mm)	1112	
DIMENSIONS	4.1	Tilt of mast forward	α (°)	10	
	4.1.1	Tilt of mast backward	β (°)	12	
	4.2	Height of mast lowered	h1 (mm)	2340	
	4.3	Normal free lift	h2 (mm)	90	
	4.4	Lift height	h3 (mm)	3300	
	4.5	Height of extended mast	h4 (mm)	4156	4161
	4.7	Standard height of the overhead guard/cab / cab with air conditioning	h6 (mm)	2155	
	4.7	Lowered height of the overhead guard, cab or cab with air conditioning	h6 *(mm)	1990	
	4.8	Height of seat	h7 (mm)	1034	
	4.12	Height of towing coupling	h10 (mm)	-	
	4.19	Total length	l1 (mm)	4195	4235
	4.20	Length of forks at heel	l2 (mm)	3045	3085
	4.21	Overall width	b1 (mm)	1450	
	4.22	Section of fork arms	s (mm)	40	45
	4.22.1	Width of fork arms	e (mm)	122	
	4.22.2	Length of fork arms	l (mm)	1150	
	4.23	Fork carriage (to DIN 15173 A/B)		FEM 2A	FEM 3A
	4.24	Width of fork carriage (with load back-rest)	b3 (mm)	1260	
	4.31	Ground clearance of mast unladen	m1 (mm)	300	
	4.32	Ground clearance at centre of wheel-base unladen	m2 (mm)	320	
	4.33	Aisle width for 1,000x1,200 pallet widthways	Ast (mm)	4591	4626
	4.34	Turning radius	Wa (mm)	2620	2650

647690 (29/01/2019)
MC . . D K ST3A S1 / MSI . . D K ST3A S5

PERFORMANCES	5.1	Speed of travel laden	km/h	12	
	5.1.1	Speed of travel unladen (2WD/4WD)	km/h	25 / -	
	5.2	Speed of rise laden	m/s	0.47	
	5.2.1	Speed of rise unladen	m/s	0.46	
	5.3	Speed of lowering laden	m/s	0.5	
	5.3.1	Speed of lowering unladen	m/s	0.3	
	5.5	Nominal towing power laden	daN	1775	1720
	5.5.1	Nominal towing power unladen	daN	1110	1150
	5.7	Slope laden	%	29	23
	5.7.1	Slope unladen	%	30	26
	5.8	Acceleration time when driving unladen (2WD/4WD)	s	13/ -	
	5.9	Service brake		Low pressure hydraulic	
ENGINE SPECIFICATION	7.1	Engine manufacturer/Type		KUBOTA / V2403	
	7.2	Engine power rating (to ISO 1585)	kW	36.5	
	7.3	Rated speed	rpm	2700	
	7.4	Number of pistons/Capacity	cm^3	4 - 2434	
	7.5	Fuel consumption (according to VDI cycle)	l/h	5.2	5.3
MISCELLANEOUS	8.1	Speed control		Cable	
	8.2	Working hydraulic pressure for attachments	Bars	180	
	8.3	Pump outlet oil flow rate	l/min	57	
	8.3	Oil flow rate for attachments	l/min	53	
	8.4	Sound level in the driver's ear (according to DIN 12053) (guard/cab)	db (A)	82	
	8.5	Guaranteed sound power level to the environment LWA (according to Directive 2000/14/EC modified by Directive 2005/88/EC)	db (A)	104	
	8.6	Average weighted acceleration on driver's body (according to NF EN 13059)	m/s	0.97	

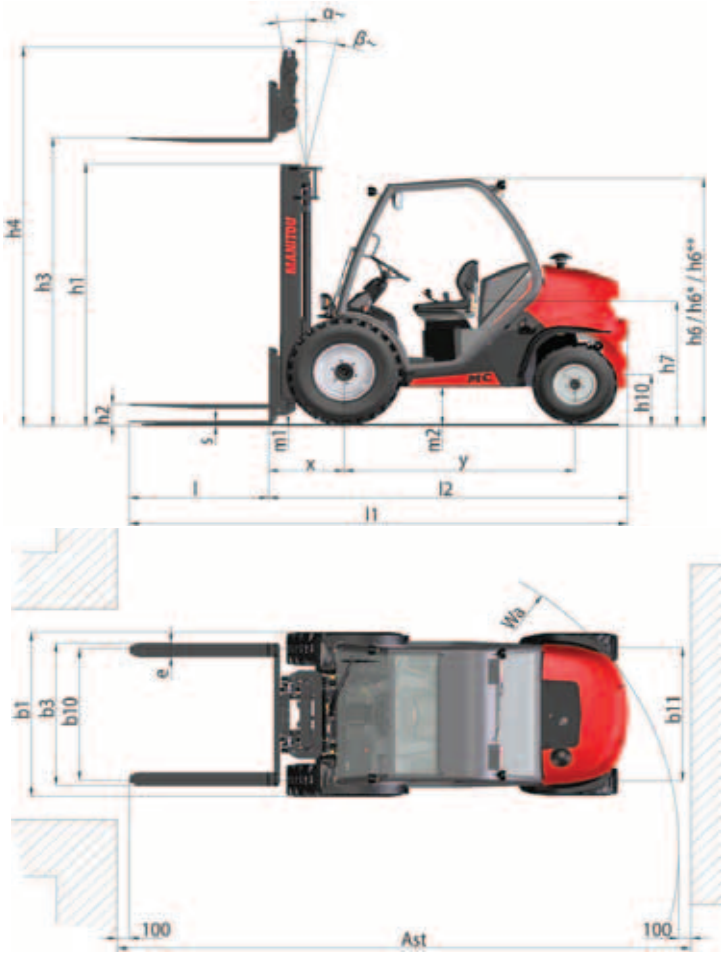

CHARACTERISTICS MC 25-4 D K ST3A S1 MC 30-4 D K ST3A S1

NOTE: The specifications given are not binding on the manufacturer and can be modified without prior notification.

DESIGNATION	1.1	Manufacturer		MANITOU	
	1.2	Model type / Serial no.		MC 25-4 D K ST3A S1	MC 30-4 D K ST3A S1
	1.3	Propulsion: battery, diesel, petrol, LPG, mains		Diesel	
	1.4	Type of operation: manual, pedestrian, standing, seated		Seated	
	1.5	Rated capacity/load on forks (basic capacity)	Q (t)	2.5	3.0
	1.6	Centre of gravity of load	c (mm)	500	
	1.8	Distance from the load bearing surface to the centre of the front axle	x (mm)	621	626
	1.9	Wheelbase	y (mm)	1900	
WEIGHT	2.1	Weight of truck in working order	kg	4035	4515
	2.2	Front axle load laden	kg	5550	6595
	2.2.1	Rear axle load laden	kg	985	920
	2.3	Front axle load unladen	kg	1575	1820
	2.3.1	Rear axle load unladen	kg	2460	2695
RUNNING CARRIAGE	3.1	Tyre equipment : bandage (V), super-elastic (SE), pneumatic (L)		L	
	3.2	Size of front wheels	" or mm	12.5/80-18/12 SL R4	
	3.3	Size of rear wheels	" or mm	27x10-12 SKS	
	3.5	Number of front wheels (x = drive wheel)		2x	
	3.5.1	Number of rear wheels (x = drive wheel)		2x	
	3.6	Front track (middle of wheels)	b10 (mm)	1159	
	3.7	Rear track (middle of wheels)	b11 (mm)	1176	
DIMENSIONS	4.1	Tilt of mast forward	α (°)	10	
	4.1.1	Tilt of mast backward	β (°)	12	
	4.2	Height of mast lowered	h1 (mm)	2340	
	4.3	Normal free lift	h2 (mm)	90	
	4.4	Lift height	h3 (mm)	3300	
	4.5	Height of extended mast	h4 (mm)	4156	4161
	4.7	Standard height of the overhead guard/cab / cab with air conditioning	h6 (mm)	2155	
	4.7	Lowered height of the overhead guard, cab or cab with air conditioning	h6 *(mm)	1990	
	4.8	Height of seat	h7 (mm)	1094	
	4.12	Height of towing coupling	h10 (mm)	-	
	4.19	Total length	l1 (mm)	4195	4235
	4.20	Length of forks at heel	l2 (mm)	3045	3085
	4.21	Overall width	b1 (mm)	1450	
	4.22	Section of fork arms	s (mm)	40	45
	4.22.1	Width of fork arms	e (mm)	122	
	4.22.2	Length of fork arms	l (mm)	1150	
	4.23	Fork carriage (to DIN 15173 A/B)		FEM 2A	FEM 3A
	4.24	Width of fork carriage (with load back-rest)	b3 (mm)	1260	
	4.31	Ground clearance of mast unladen	m1 (mm)	300	
	4.32	Ground clearance at centre of wheel-base unladen	m2 (mm)	310	
	4.33	Aisle width for 1,000x1,200 pallet widthways	Ast (mm)	5376	5411
	4.34	Turning radius	Wa (mm)	3405	3435

647690 (29/01/2019)
MC . . D K ST3A S1 / MSI . . D K ST3A S5

43PERFORMANCES	5.1	Speed of travel laden	km/h	12	
	5.1.1	Speed of travel unladen (2WD/4WD)	km/h	25 /14	
	5.2	Speed of rise laden	m/s	0.47	
	5.2.1	Speed of rise unladen	m/s	0.46	
	5.3	Speed of lowering laden	m/s	0.5	
	5.3.1	Speed of lowering unladen	m/s	0.3	
	5.5	Nominal towing power laden	daN	2775	2880
	5.5.1	Nominal towing power unladen	daN	2035	1860
	5.7	Slope laden	%	47	40
	5.7.1	Slope unladen	%	58	43
	5.8	Acceleration time when driving unladen (2WD/4WD)	s	13 / 7	
	5.9	Service brake		Low pressure hydraulic	
ENGINE SPECIFICATION	7.1	Engine manufacturer/Type		KUBOTA / V2403	
	7.2	Engine power rating (to ISO 1585)	kW	36.5	
	7.3	Rated speed	rpm	2700	
	7.4	Number of pistons/Capacity	cm^3	4 - 2434	
	7.5	Fuel consumption (according to VDI cycle)	l/h	6.1	
MISCELLANEOUS	8.1	Speed control		Cable	
	8.2	Working hydraulic pressure for attachments	Bars	180	
	8.3	Pump outlet oil flow rate	l/min	57	
	8.3	Oil flow rate for attachments	l/min	53	
	8.4	Sound level in the driver's ear (according to DIN 12053) (guard/cab)	db (A)	82	
	8.5	Guaranteed sound power level to the environment LWA (according to Directive 2000/14/EC modified by Directive 2005/88/EC)	db (A)	104	
	8.6	Average weighted acceleration on driver's body (according to NF EN 13059)	m/s	0.97	

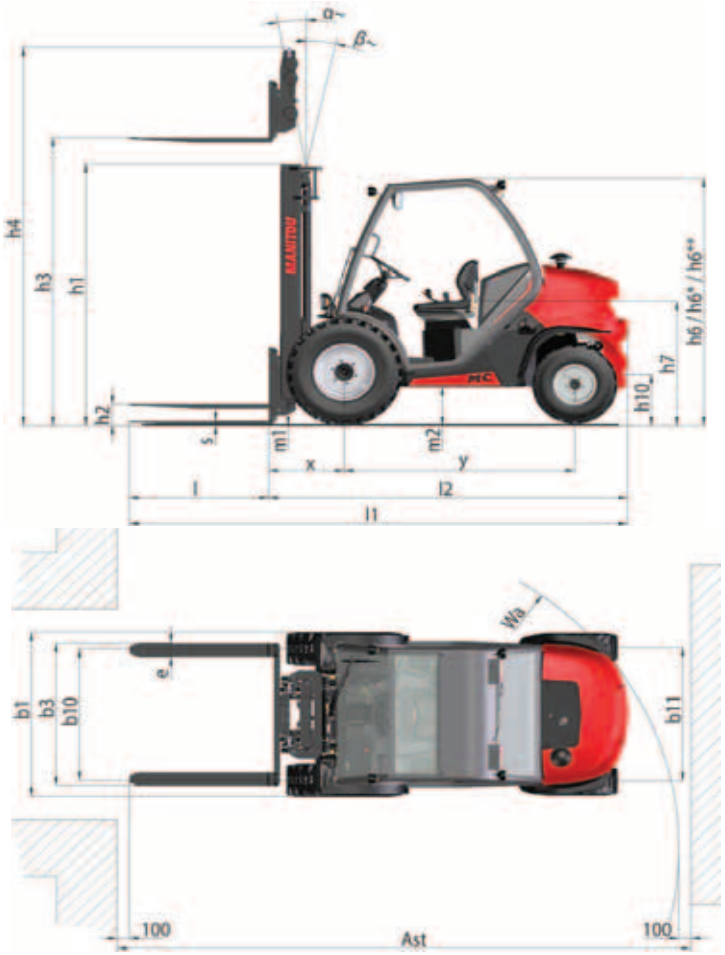

647690 (29/01/2019)
MC . . D K ST3A S1 / MSI . . D K ST3A S5

CHARACTERISTICS MSI 25 D K ST3A S5 MSI 30 D K ST3A S5 MSI 35 D K ST3A S5

NOTE: The specifications given are not binding on the manufacturer and can be modified without prior notification.

DESIGNATION	1.1	Manufacturer		MANITOU		
	1.2	Model type / Serial no.		MSI 25 D K ST3A S5	MSI 30 D K ST3A S5	MSI 35 D K ST3A S5
	1.3	Propulsion: battery, diesel, petrol, LPG, mains		Diesel		
	1.4	Type of operation: manual, pedestrian, standing, seated		Seated		
	1.5	Rated capacity/load on forks (basic capacity)	Q (t)	2.5	3.0	3.5
	1.6	Centre of gravity of load	c (mm)	500		
	1.8	Distance from the load bearing surface to the centre of the front axle	x (mm)	621	626	631
	1.9	Wheelbase	y (mm)	1900		
WEIGHT	2.1	Weight of truck in working order	kg	3875	4355	4645
	2.2	Front axle load laden	kg	5510	6435	7260
	2.2.1	Rear axle load laden	kg	865	920	885
	2.3	Front axle load unladen	kg	1533	1660	1680
	2.3.1	Rear axle load unladen	kg	2342	2695	2965
RUNNING CARRIAGE	3.1	Tyre equipment : bandage (V), super-elastic (SE), pneumatic (L)		L		
	3.2	Size of front wheels	" or mm	300-15/18 6T P43		
	3.3	Size of rear wheels	" or mm	7.00-12/12 ED PLUS		
	3.5	Number of front wheels (x = drive wheel)		2x		
	3.5.1	Number of rear wheels (x = drive wheel)		2		
	3.6	Front track (middle of wheels)	b10 (mm)	1044		
	3.7	Rear track (middle of wheels)	b11 (mm)	1108		
DIMENSIONS	4.1	Tilt of mast forward	α (°)	10		
	4.1.1	Tilt of mast backward	β (°)	12		
	4.2	Height of mast lowered	h1 (mm)	2280		
	4.3	Normal free lift	h2 (mm)	130	130	135
	4.4	Lift height	h3 (mm)	3300		
	4.5	Height of extended mast	h4 (mm)	4095	4100	4100
	4.7	Standard height of the overhead guard/cab / cab with air conditioning	h6 (mm)	2095		
	4.7	Lowered height of the overhead guard, cab or cab with air conditioning	h6 *(mm)	1930		
	4.8	Height of seat	h7 (mm)	972		
	4.12	Height of towing coupling	h10 (mm)	-		
	4.19	Total length	l1 (mm)	4193	4234	4339
	4.20	Length of forks at heel	l2 (mm)	3043	3084	3189
	4.21	Overall width	b1 (mm)	1330		
	4.22	Section of fork arms	s (mm)	40	45	50
	4.22.1	Width of fork arms	e (mm)	122		
	4.22.2	Length of fork arms	l (mm)	1150		
	4.23	Fork carriage (to DIN 15173 A/B)		FEM 2A	FEM 3A	FEM 3A
	4.24	Width of fork carriage (with load back-rest)	b3 (mm)	1260		
	4.31	Ground clearance of mast unladen	m1 (mm)	260		
	4.32	Ground clearance at centre of wheel-base unladen	m2 (mm)	238		
	4.33	Aisle width for 1,000x1,200 pallet widthways	Ast (mm)	4591	4626	4661
	4.34	Turning radius	Wa (mm)	2620	2650	2680

647690 (29/01/2019)
MC.. D K ST3A S1 / MSI.. D K ST3A S5

PERFORMANCES	5.1	Speed of travel laden	km/h	18		
	5.1.1	Speed of travel unladen (2WD/4WD)	km/h	22		
	5.2	Speed of rise laden	m/s	0.5		
	5.2.1	Speed of rise unladen	m/s	0.5		
	5.3	Speed of lowering laden	m/s	0.5		
	5.3.1	Speed of lowering unladen	m/s	0.3		
	5.5	Nominal towing power laden	daN			1810
	5.5.1	Nominal towing power unladen	daN			940
	5.7	Slope laden	%			18
	5.7.1	Slope unladen	%			14
	5.8	Acceleration time when driving unladen (2WD/4WD)	s			
	5.9	Service brake		Low pressure hydraulic		
ENGINE SPECIFICATION	7.1	Engine manufacturer/Type		KUBOTA / V2403		
	7.2	Engine power rating (to ISO 1585)	kW	36.5		
	7.3	Rated speed	rpm	2700		
	7.4	Number of pistons/Capacity	cm^3	4 - 2434		
	7.5	Fuel consumption (according to VDI cycle)	l/h	5.2	5.3	5.3
MISCELLANEOUS	8.1	Speed control		Cable		
	8.2	Working hydraulic pressure for attachments	Bars	180		
	8.3	Pump outlet oil flow rate	l/min	71		
	8.3	Oil flow rate for attachments	l/min			
	8.4	Sound level in the driver's ear (according to DIN 12053) (guard/cab)	db (A)			
	8.5	Guaranteed sound power level to the environment LWA (according to Directive 2000/14/EC modified by Directive 2005/88/EC)	db (A)			
	8.6	Average weighted acceleration on driver's body (according to NF EN 13059)	m/s	-		

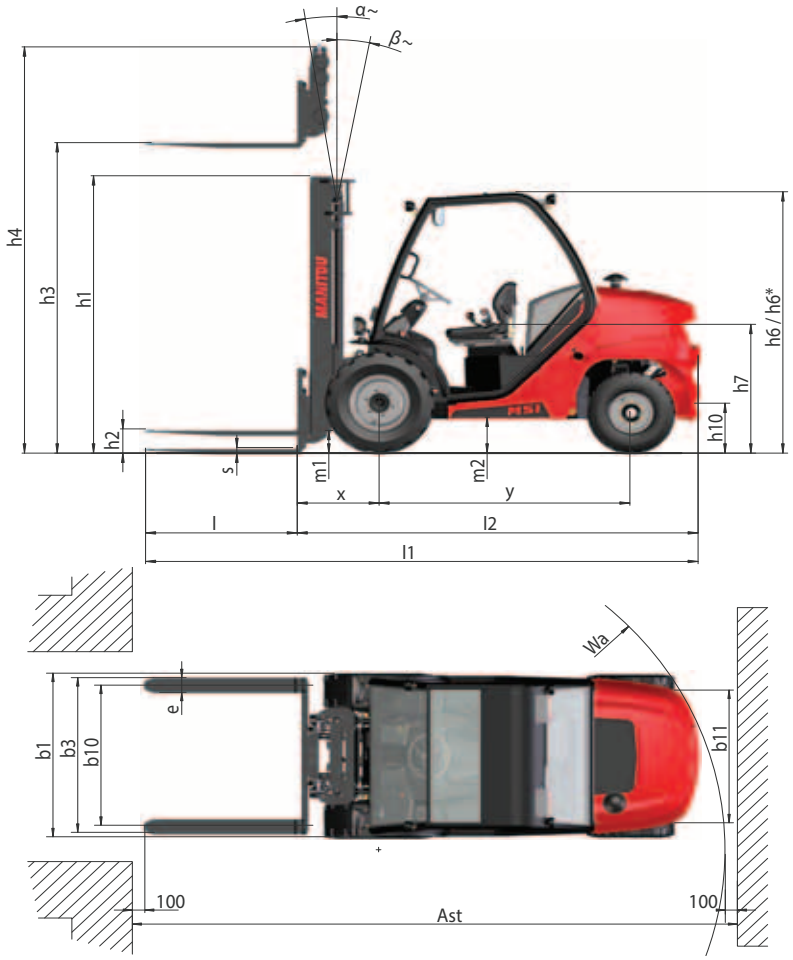

CHARACTERISTICS OF MASTS AND LOAD CHARTS

MC 25-2 D K ST3A S5 MC 25-4 D K ST3A S5

MC 25-2 D K ST3A S5 MC 25-4 D K ST3A S5	LIFTING MAST	FREE LIFT	HEIGHT OF MAST		TILTING	
	h3 (mm)	h2 (mm)	h1 (mm) lowered	h4 (mm) extended	FRONT α (°)	REAR β (°)
DUPLEX TOTAL VISIBILITY	2700	90	2040	3576	10	12
	3000	90	2190	3876	10	12
	3300	90	2340	4176	10	12
	3500	90	2440	4376	10	12
	3700	90	2600	4576	10	12
	4000	90	2790	4876	10	12
	4500	90	3040	5376	10	12
	5000	90	3290	5876	6	6
	5500	90	3540	6376	6	6
	6000	90	3830	6876	6	6
TRIPLEX WITHOUT FREE LIFT	3300	0	1880	4115	10	12
TRIPLEX FREE LIFT	3700	1216	1990	4514	10	12
	4000	1316	2090	4814	10	12
	4300	1416	2190	5114	10	12
	4700	1566	2340	5514	10	12
	5000	1666	2440	5814	6	6
	5500	1826	2600	6314	6	6
	6000	2016	2790	6814	6	6
	6500	2266	3040	7314	6	6
	7000	2516	3290	7814	6	6

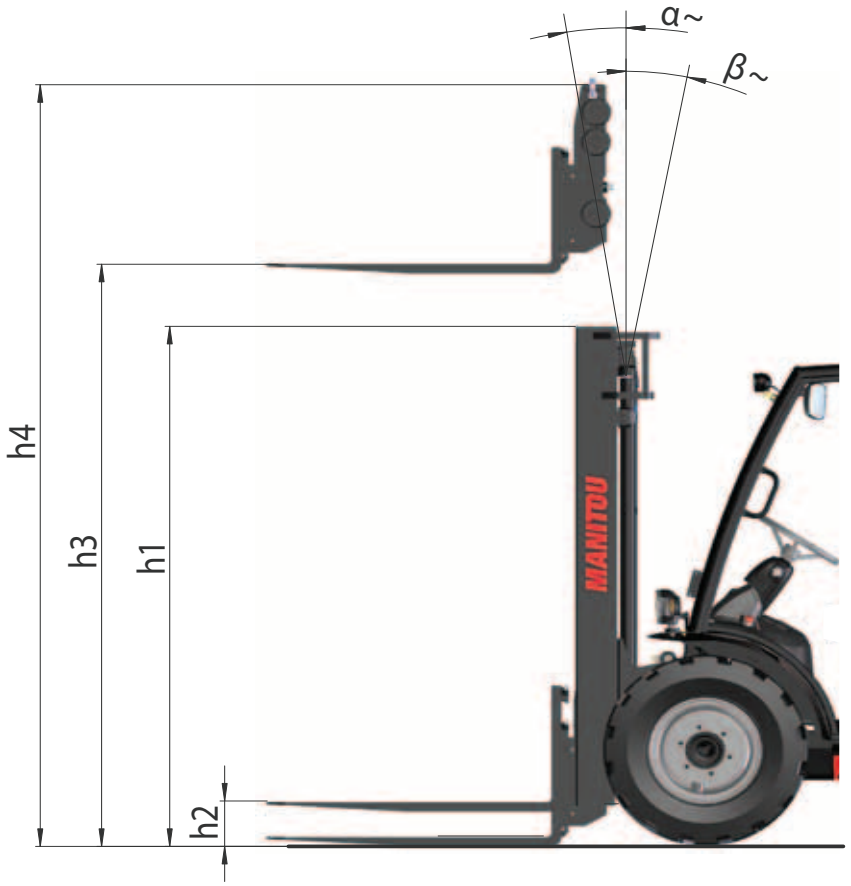

VALUES ON FORKS		VALUES WITH INTEGRATED TDL	
Height at max. capacity (mm)	Capacity at max. height CoG at 500 mm (kg)	Height at max. capacity (mm)	Capacity at max. height CoG at 500 mm (kg)
2.5 t	**2.5 t**	**2.5 t**	**2.5 t**
2700	2500		
3000	2500		
3000	1650		
3000	1650		

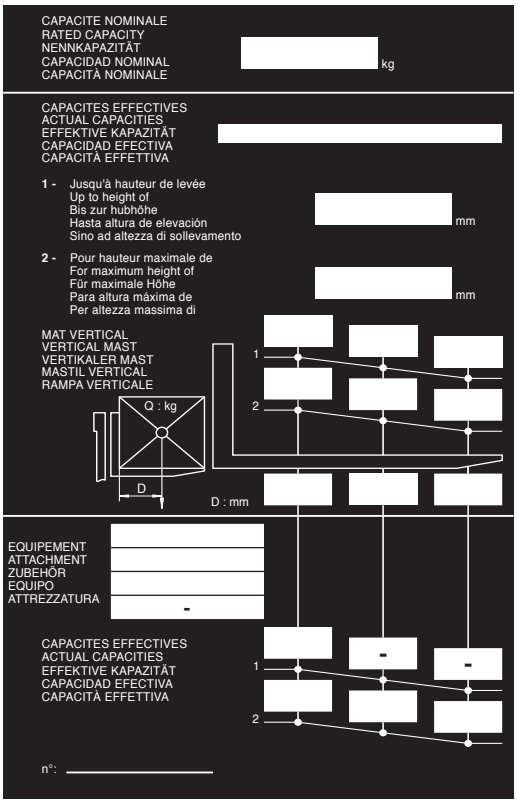

647690 (29/01/2019)
MC . . D K ST3A S1 / MSI . . D K ST3A S5

CHARACTERISTICS OF MASTS AND LOAD CHARTS

MC 30-2 D K ST3A S5 MC 30-4 D K ST3A S5

MC 30-2 D K ST3A S5 MC 30-4 D K ST3A S5	LIFTING MAST	FREE LIFT	HEIGHT OF MAST		TILTING	
	h3 (mm)	h2 (mm)	h1 (mm) lowered	h4 (mm) extended	FRONT α (°)	REAR β (°)
DUPLEX TOTAL VISIBILITY	3000	90	2190	3938	10	12
	3300	90	2340	4238	10	12
	3500	90	2440	4438	10	12
	3700	90	2600	4638	10	12
	4000	90	2790	4938	10	12
	4500	90	3040	5438	10	12
	5000	90	3290	5938	6	6
	5500	90	3540	6393	6	6
	6000	90	3830	6938	6	6
TRIPLEX FREE LIFT	3700	1292	2090	4545	10	12
	4000	1392	2190	4845	10	12
	4300	1542	2340	5145	10	12
	4700	1642	2440	5545	10	12
	5000	1802	2600	5845	6	6
	5500	1992	2790	6345	6	6
	6000	2242	3040	6845	6	6
	6500	2492	3290	7345	6	6
	7000	2742	3540	7845	6	6

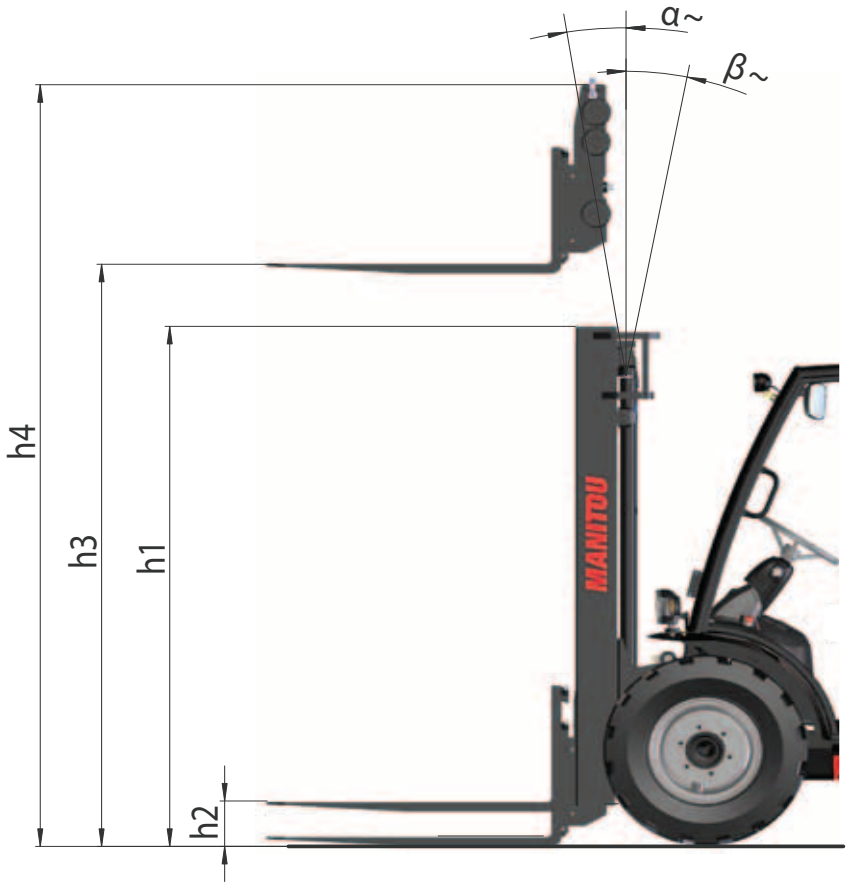

VALUES ON FORKS		VALUES WITH INTEGRATED TDL	
Height at max. capacity (mm)	Capacity at max. height CoG at 500 mm (kg)	Height at max. capacity (mm)	Capacity at max. height CoG at 500 mm (kg)
3.0 t	**3.0 t**	**3.0 t**	**3.0 t**
3000	3000		
3100	1600		

RATED CAPACITY →

ACTUAL CAPACITIES (according to standard ISO 3691-1) →

1 - Up to height of →

2 - For maximum height of →

VERTICAL MAST →

EQUIPMENT →

ACTUAL CAPACITIES →

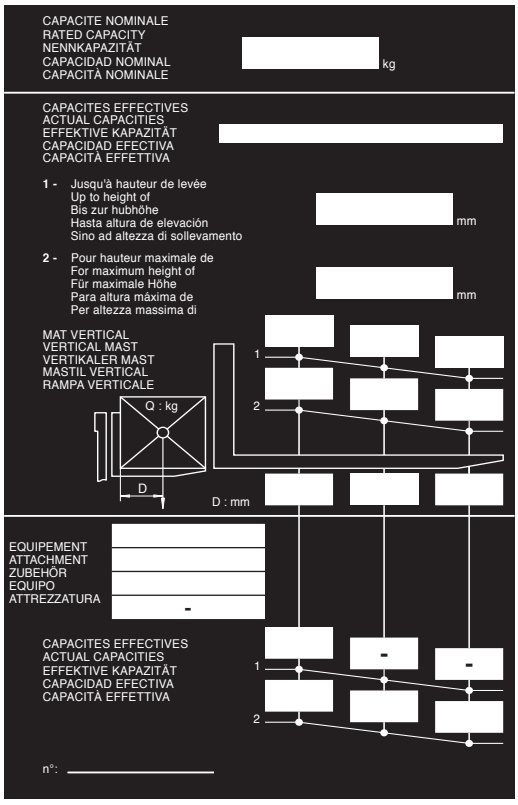

647690 (29/01/2019)
MC . . D K ST3A S1 / MSI . . D K ST3A S5

CHARACTERISTICS OF MASTS AND LOAD CHARTS

MSI 25 D K ST3A S5

MSI 25 D K ST3A S5	LIFTING MAST	FREE LIFT	HEIGHT OF MAST		TILTING	
	h3 (mm)	h2 (mm)	h1 (mm) lowered	h4 (mm) extended	FRONT α (°)	REAR β (°)
DUPLEX TOTAL VISIBILITY	2700	90	2000	3536	10	12
	3000	90	2150	3836	10	12
	3300	90	2300	4136	10	12
	3500	90	2400	4336	10	12
	3700	90	2560	4536	10	12
	4000	90	2750	4836	10	12
	4500	90	3000	5336	10	12
	5000	90	3250	5836	6	6
	5500	90	3500	6336	6	6
	6000	90	3790	6836	6	6
TRIPLEX WITHOUT FREE LIFT	3300	0	1840	4075	10	12
TRIPLEX FREE LIFT	3700	1216	1950	4474	10	12
	4000	1316	2050	4774	10	12
	4300	1416	2150	5074	10	12
	4700	1566	2300	5474	10	12
	5000	1666	2400	5774	6	6
	5500	1826	2560	6274	6	6

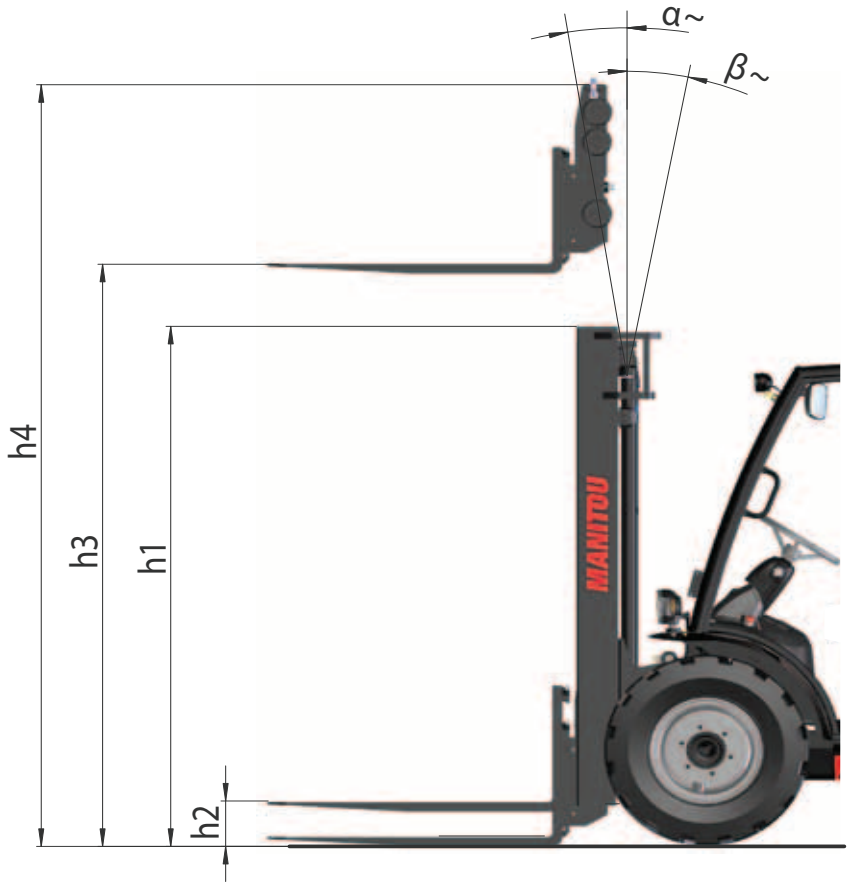

VALUES ON FORKS		VALUES WITH INTEGRATED TDL	
Height at max. capacity (mm)	Capacity at max. height CoG at 500 mm (kg)	Height at max. capacity (mm)	Capacity at max. height CoG at 500 mm (kg)
2.5 t	**2.5 t**	**2.5 t**	**2.5 t**
2700	2500		
3000	2500		
3300	2500		
3500	2500		
3700	2500		
3300	2500		
3700	2500		

RATED CAPACITY →

ACTUAL CAPACITIES (according to standard ISO 3691-1) →

1 - Up to height of →

2 - For maximum height of →

VERTICAL MAST →

EQUIPMENT →

ACTUAL CAPACITIES →

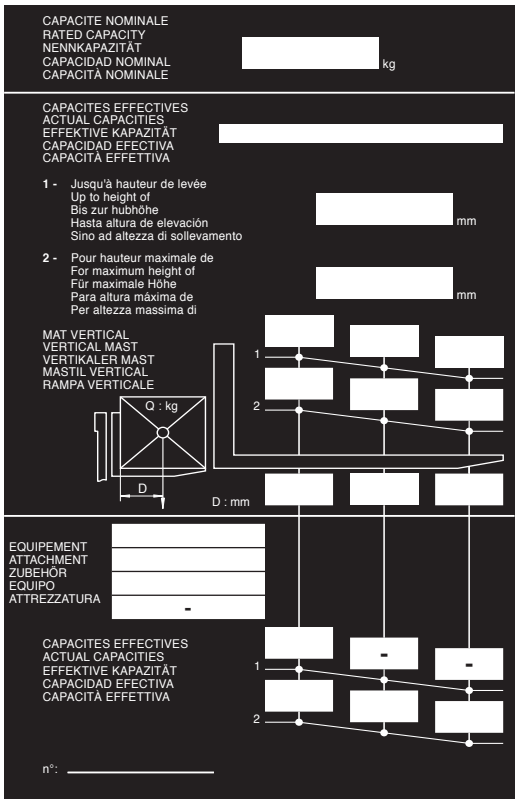

647690 (29/01/2019)
MC . . D K ST3A S1 / MSI . . D K ST3A S5

CHARACTERISTICS OF MASTS AND LOAD CHARTS

MSI 30 D K ST3A S5

MSI 30 D K ST3A S5	LIFTING MAST	FREE LIFT	HEIGHT OF MAST		TILTING	
	h3 (mm)	h2 (mm)	h1 (mm) lowered	h4 (mm) extended	FWD α (°)	RWD β (°)
DUPLEX TOTAL VISIBILITY	3000	90	2150	3895	10	12
	3300	90	2300	4195	10	12
	3500	90	2400	4395	10	12
	3700	90	2560	4595	10	12
	4000	90	2750	4895	10	12
	4500	90	3000	5395	10	12
	5000	90	3250	5895	6	6
	5500	90	3500	6395	6	6
	6000	90	3790	6895	6	6
TRIPLEX FREE LIFT	3700	1292	2050	4505	10	12
	4000	1392	2150	4805	10	12
	4300	1542	2300	5105	10	12
	4700	1642	2400	5505	10	12
	5000	1802	2560	5805	6	6
	5500	1992	2750	6305	6	6
	6000	2242	3000	6805	6	6
	6500	2492	3250	7305	6	6
	7000	2742	3500	7805	6	6

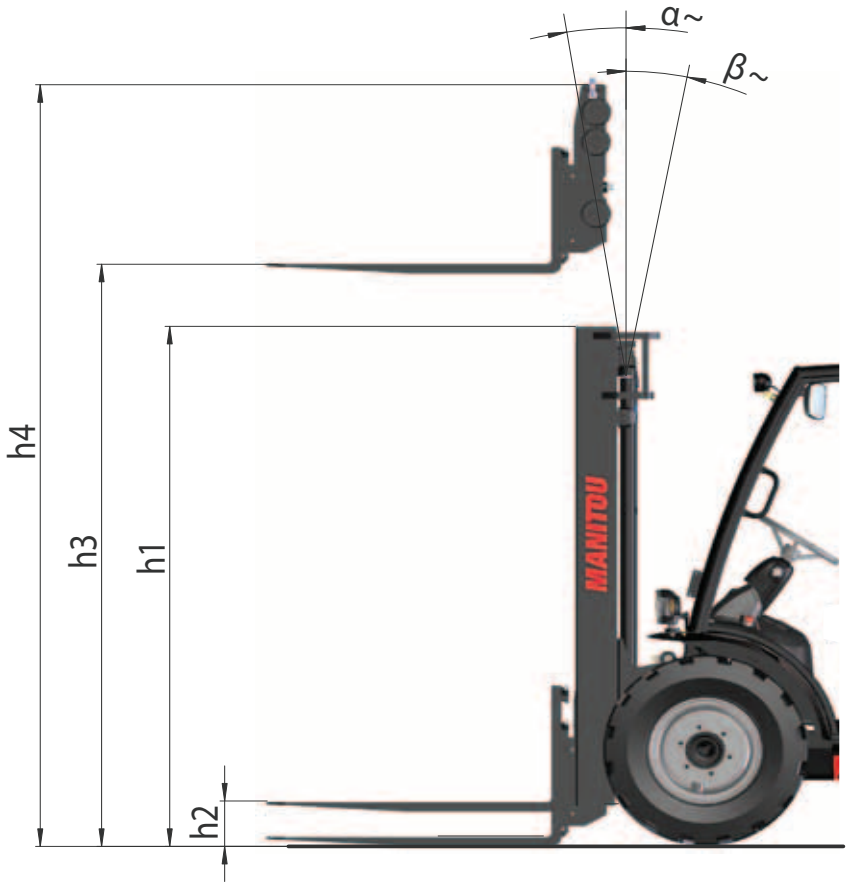

VALUES ON FORKS		VALUES WITH INTEGRATED TDL	
Height at max. capacity (mm)	Capacity at max. height CoG at 500 mm (kg)	Height at max. capacity (mm)	Capacity at max. height CoG at 500 mm (kg)
3.0 t	**3.0 t**	**3.0 t**	**3.0 t**
3000	3000		
3300	3000		
3500	3000		
3700	3000		
3700	3000		
4500	2850		

RATED CAPACITY →

ACTUAL CAPACITIES (according to standard ISO 3691-1) →

1 - Up to height of →

2 - For maximum height of →

VERTICAL MAST →

EQUIPMENT →

ACTUAL CAPACITIES →

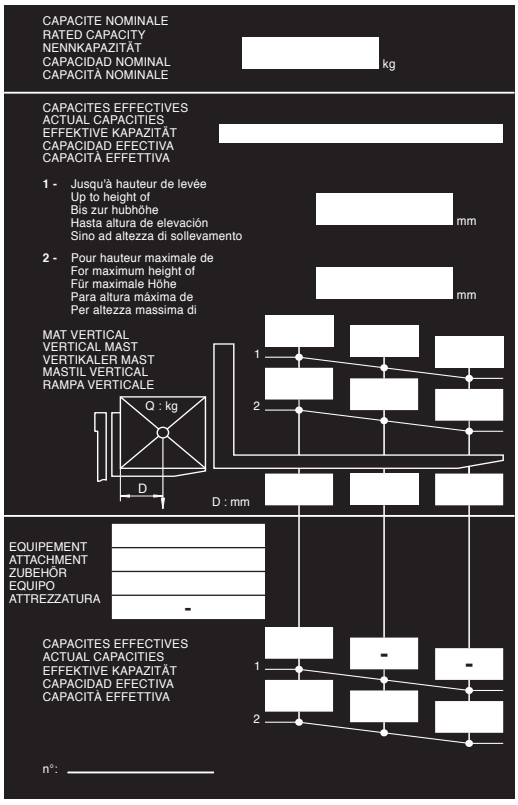

647690 (29/01/2019)
MC . . D K ST3A S1 / MSI . . D K ST3A S5

CHARACTERISTICS OF MASTS AND LOAD CHARTS

MSI 35 D K ST3A S5

MSI 35 D K ST3A S5	LIFTING MAST	FREE LIFT	HEIGHT OF MAST		TILTING	
	h3 (mm)	h2 (mm)	h1 (mm) lowered	h4 (mm) extended	FWD α (°)	RWD β (°)
DUPLEX TOTAL VISIBILITY	3000	90	2150	3895	10	12
	3300	90	2300	4195	10	12
	3500	90	2400	4395	10	12
	3700	90	2560	4595	10	12
	4000	90	2750	4895	10	12
	4500	90	3000	5395	10	12
	5000	90	3250	5895	6	6
	5500	90	3500	6395	6	6
	6000	90	3790	6895	6	6
TRIPLEX FREE LIFT	3700	1292	2050	4505	10	12
	4000	1392	2150	4805	10	12
	4300	1542	2300	5105	10	12
	4700	1642	2400	5505	10	12
	5000	1802	2560	5805	6	6
	5500	1992	2750	6305	6	6
	6000	2242	3000	6805	6	6
	6500	2492	3250	7305	6	6
	7000	2742	3500	7805	6	6

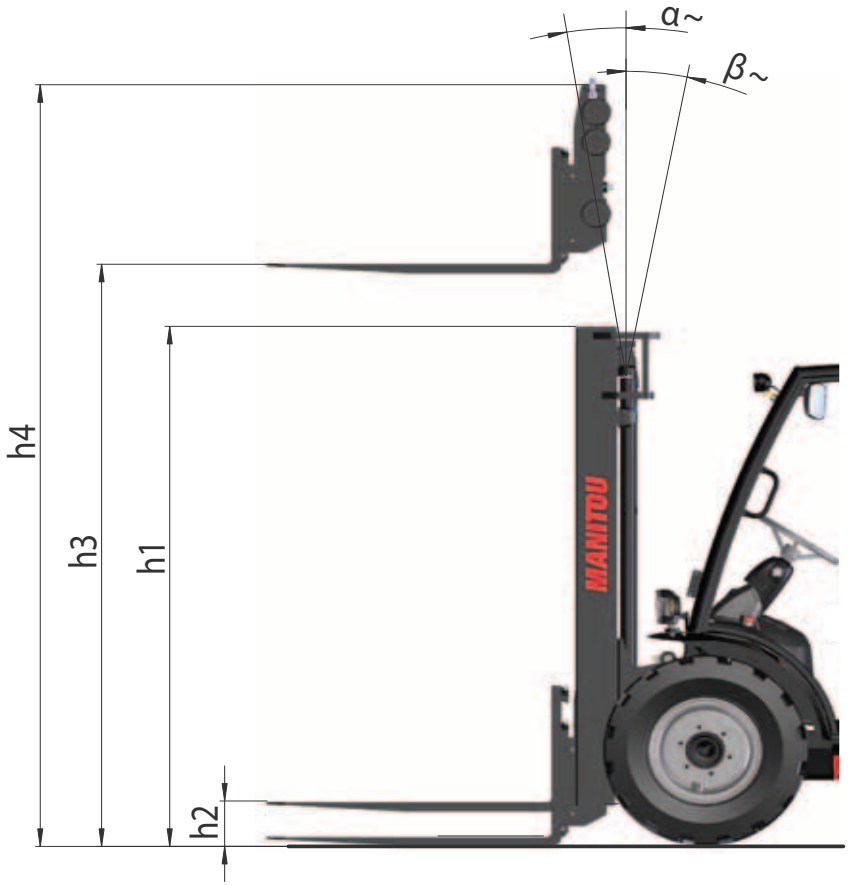

647690 (29/01/2019)
MC.. D K ST3A S1 / MSI.. D K ST3A S5

VALUES ON FORKS		VALUES WITH INTEGRATED TDL	
Height at max. capacity (mm)	Capacity at max. height CoG at 500 mm (kg)	Height at max. capacity (mm)	Capacity at max. height CoG at 500 mm (kg)
3.5 t	**3.5 t**	**3.5 t**	**3.5 t**
3000	3500		
3300	3500		
3500	3500		
3700	3500		
3700	3500		
4200	3000		

RATED CAPACITY →

ACTUAL CAPACITIES (according to standard ISO 3691-1) →

1 - Up to height of →

2 - For maximum height of →

VERTICAL MAST →

EQUIPMENT →

ACTUAL CAPACITIES →

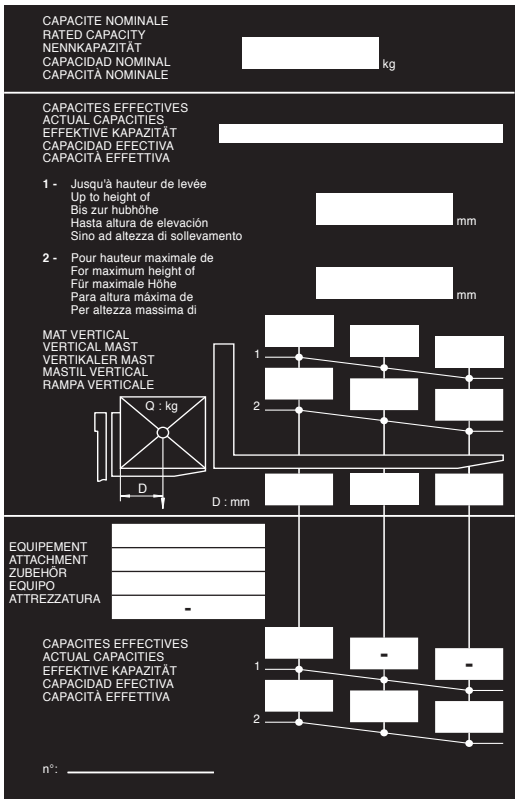

647690 (29/01/2019)
MC . . D K ST3A S1 / MSI . . D K ST3A S5

TYRES

FRONT

		PRESSURE (bar) LOAD PER TYRE (kg)	MC 25-2 D	MC 25-4 D	MC 30-2 D	MC 30-4 D	MSI 25 D	MSI 30 D	MSI 35 D
SOLIDEAL	12.5/80-18/12 SL R4	PRESSURE	3.7	3.7	3.7	3.7			
		Front unladen	750	800	850	900			
		Front laden	2750	2800	3200	3300			
	300-15/18 ED PLUS	PRESSURE					7.5	7.5	7.5
		Front unladen					750	850	850
		Front laden					2750	3200	3650
CONTINENTAL	275/80R20 14PR	PRESSURE	5.3	5.3	5.6	5.6			
		Front unladen	750	800	850	900			
		Front laden	2750	2800	3200	3300			
	315/70 R15 22PR RT20	PRESSURE					10	10	10
		Front unladen					750	850	850
		Front laden					2750	3200	3650
	300-15 22PR IC40	PRESSURE					10	10	10
		Front unladen					750	850	850
		Front laden					2750	3200	3650
	315/70 -15/8,0 SC20 M+ PPS	PRESSURE					SOLID	SOLID	SOLID
		Front unladen					750	850	850
		Front laden					2750	3200	3650
ALIANCE	300/75R18 580	PRESSURE	4.4	4.4	4.4	4.4			
		Front unladen	750	800	850	900			
		Front laden	2750	2800	3200	3300			
DUNLOP	15.5/55 R18 14PR	PRESSURE	4	4	4	4	4	4	4
		Front unladen	750	800	850	900	750	850	850
		Front laden	2750	2800	3200	3300	2750	3200	3650

647690 (29/01/2019)
MC . . D K ST3A S1 / MSI . . D K ST3A S5

REAR

		PRESSURE (bar) LOAD PER TYRE (kg)	MC 25-2 D	MC 25-4 D	MC 30-2 D	MC 30-4 D	MSI 25 D	MSI 30 D	MSI 35 D
SOLIDEAL	7.00-12/12 ED PLUS	PRESSURE	8.5		8.5		8.5	8.5	8.5
		Rear unladen	1650		1750		1150	1300	1500
		Rear laden	450		450		450	450	450
	27x10-12/14 SKS	PRESSURE		8.3		8.3			
		Rear unladen		1250		1350			
		Rear laden		500		450			
CONTINENTAL	27.10.12 14PR IC12	PRESSURE	4.5		4.5				
		Rear unladen	1650		1750				
		Rear laden	450		450				
	27.10.12 14PR IC30	PRESSURE		7		7			
		Rear unladen		1250		1350			
		Rear laden		500		450			
	7,00 R12 16 PR RT20	PRESSURE					10	10	10
		Rear unladen					1150	1300	1500
		Rear laden					450	450	450
	7,00-12 14 PR IC40	PRESSURE					9	9	9
		Rear unladen					1150	1300	1500
		Rear laden					450	450	450
	7.00-12/5.0 SC20 M+ PPS	PRESSURE					SOLID	SOLID	SOLID
		Rear unladen					1150	1300	1500
		Rear laden					450	450	450

647690 (29/01/2019)
MC . . D K ST3A S1 / MSI . . D K ST3A S5

		PRESSURE (bar)	LOAD (kg)	GROUND CONTACT PRESSURE (kg/cm2)		GROUND CONTACT AREA (cm2)	
				HARD GROUND	SOFT GROUND	HARD GROUND	SOFT GROUND
SOLIDEAL	12.5/80-18/12 SL R4	3.7	750				
			800				
			850				
			900				
			2750				
			2800				
			3200				
			3300				
	300-15/18 ED PLUS	7.5	750				
			850				
			2750				
			3200				
			3650				
	7.00-12/12 ED PLUS	8.5	450				
			1150				
			1300				
			1500				
			1650				
			1750				
	27x10-12/14 SKS	8.3	450				
			500				
			1250				
			1350				
ALIANCE	300/75R18 580	4.4	750				
			800				
			850				
			900				
			2750				
			2800				
			3200				
			3300				
DUNLOP	15.5/55 R18 14PR	4	750				
			800				
			850				
			900				
			2750				
			2800				
			3200				
			3300				
			3650				

647690 (29/01/2019)
MC.. DK ST3A S1 / MSI.. DK ST3A S5

		PRESSURE (bar)	LOAD (kg)	GROUND CONTACT PRESSURE (kg/cm2)		GROUND CONTACT AREA (cm2)	
				HARD GROUND	SOFT GROUND	HARD GROUND	SOFT GROUND
CONTINENTAL	275/80R20 14PR	5.3	750				
			800				
			27500				
			2800				
		5.6	850				
			900				
			3200				
			3300				
	315/70 R15 22PR RT20	10	750				
			850				
			2750				
			3200				
			3650				
	300-15 22PR IC40	10	750				
			850				
			2750				
			3200				
			3650				
	315/70 -15/8,0 SC20 M+ PPS	SOLID	750				
			850				
			2750				
			3200				
			3650				
	27.10.12 14PR IC12	4.5	450				
			1650				
			1750				
	27.10.12 14PR IC30	7	450				
			500				
			1250				
			1350				
	7,00 R12 16 PR RT20	10	450				
			1150				
			1300				
			1500				
	7,00-12 14 PR IC40	9	450				
			1150				
			1300				
			1500				
	7.00-12/5.0 SC20 M+ PPS	SOLID	450				
			1150				
			1300				
			1500				

647690 (29/01/2019)
MC . . D K ST3A S1 / MSI . . D K ST3A S5

INSTRUMENTS AND CONTROLS

NOTE: All the terms such as: RIGHT, LEFT, FRONT, REAR are as seen by an observer occupying the driver's seat and looking straight ahead.

(*) Not shown

DESCRIPTION (standard)

1 - DRIVER'S CAB ACCESS 2-32
2 - DRIVER'S SEAT 2-32
3 - SEAT BELT 2-32
4 - STEERING WHEEL ADJUSTMENT LEVER 2-33
5 - CONTROL AND SIGNAL LIGHTS PANEL 2-33
6 - SWITCHES 2-34
7 - WARNING ALARM 2-34
8 - IGNITION KEY 2-34
9 - EMERGENCY STOP 2-35
10 - ACCELERATOR PEDAL 2-35
11 - BRAKE AND TRANSMISSION CUT-OFF PEDAL 2-35
12 - FORWARD/NEUTRAL/REVERSE GEAR SELECTION 2-35
13 - HYDRAULIC CONTROLS 2-36
14 - LOAD CHARTS 2-36
15 - LEVEL INDICATORS 2-36
16 - INSIDE REAR-VIEW MIRROR 2-36
17 - BATTERY CUT-OFF 2-36
18 - 12V SOCKET 2-37
19 - DOCUMENT CLIP 2-37
20 - DOCUMENT STORAGE NET 2-37
21 - MOTOR COVER PANEL 2-37
22 - BATTERY COVER 2-37
23 - FUSES AND RELAYS (*) 2-38

DESCRIPTION (option)

24 - DRIVER'S SEAT 2-40
25 - WINDSCREEN WIPER CONTROL 2-45
26 - LIGHTING, HORN AND INDICATOR LIGHT CONTROL 2-45
27 - ROAD LIGHTS 2-46
28 - REAR WORKING LIGHTS 2-46
29 - FRONT WORKING LIGHTS 2-46
30 - ROTATING BEACON LIGHT OR LED FLASHING LIGHT 2-47
31 - EXTERIOR REAR-VIEW MIRROR 2-47
32 - HEATING VENTS 2-47
33 - HEATER CONTROL 2-47
34 - AIR CONDITIONING CONTROL 2-48
35 - DOOR OPENING HANDLES (*) 2-48
36 - DOOR RELEASE HANDLES (*) 2-48
37 - SLIDING WINDOWS ON LEFT-HAND DOOR (*) 2-49
38 - HALF-DOOR ON RIGHT-HAND DOOR (*) 2-49
39 - CAR RADIO (*) 2-49
40 - ENGINE IMMOBILISER SYSTEM (*) 2-49
41 - HYDRAULIC CONTROL JOYSTICK (*) 2-50

647690 (29/01/2019)
MC . . DK ST3A S1 / MS1 . . DK ST3A S5

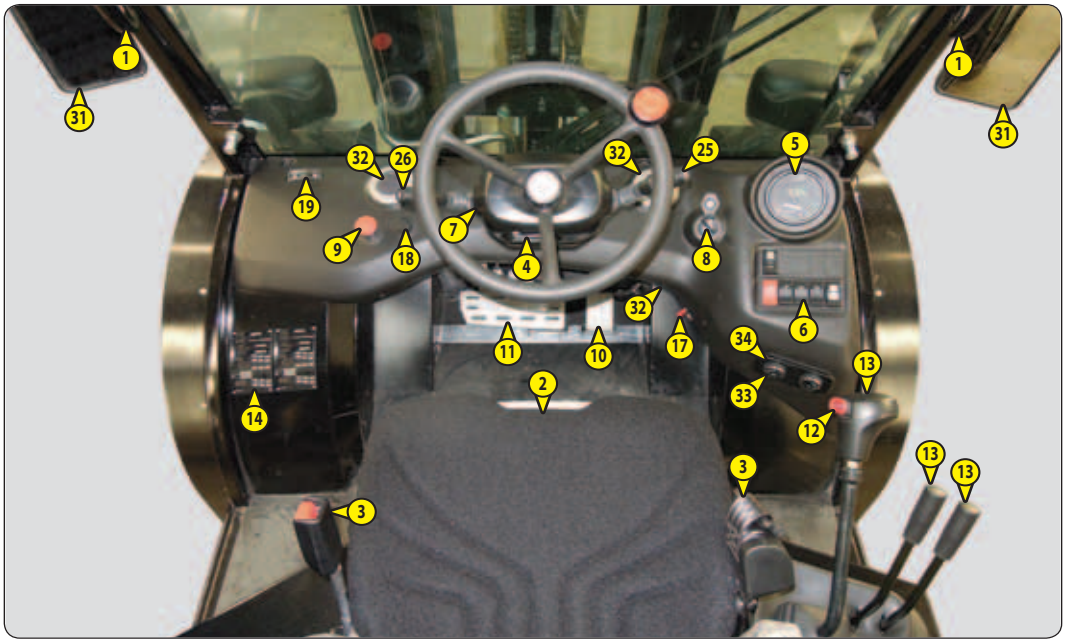
1
31
1
31
32
26
32
25
5
19
7
9
18
4
8
32
6
11
10
17
34
13
2
33
14
12
3
13
13
3

MANITOU
20
13
3
12
3
24
21
2
22
32

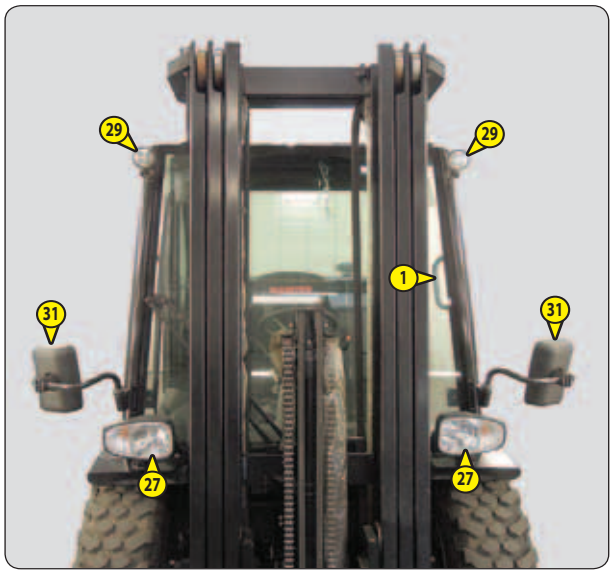
29
29
1
31
31
27
27

30
28
27
28
27
15
15
16

DESCRIPTION (standard)

1 - DRIVER'S CAB ACCESS

- Getting into and out of the driver's cab.
- Use the three support points provided.
  1 - Left handle.
  2 - Steering wheel.
  3 - Driver's cab floor.

2 - DRIVER'S SEAT

ADJUSTING WEIGHT (FIG. A)

- Lower lever 1 to the desired position.

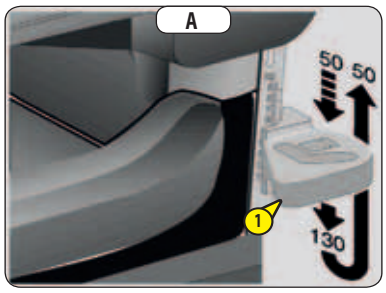

ADJUSTING DEPTH (FIG. B)

- Pull lever 2, then move the seat forward or backward into the desired position.
- Release the lever to lock it.

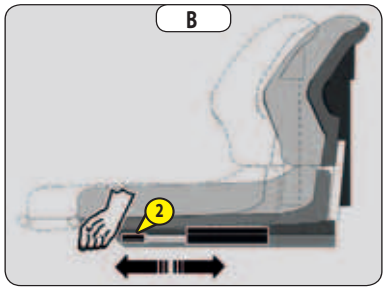

ADJUSTING ANGLE OF BACK-REST (FIG. C)

- Pull lever 3, then tilt the back-rest to the desired position.
- Release the lever to lock it.

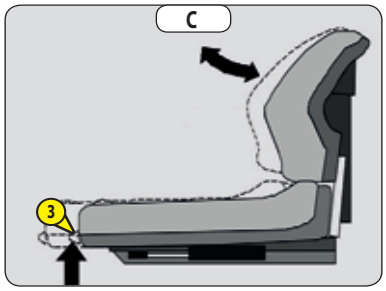

3 - SEAT BELT

- Sit correctly on the seat.
- Check the condition of the seat belt.
- Place the seat belt at hip level, without twisting it.
- Lock the seat belt.

647690 (29/01/2019)
MC . . D K ST3A S1 / MSI . . D K ST3A S5

4 - STEERING WHEEL ADJUSTMENT LEVER

- Pull handle 1 to adjust the steering wheel.
- Push in handle 1 to lock the steering wheel in the desired position.

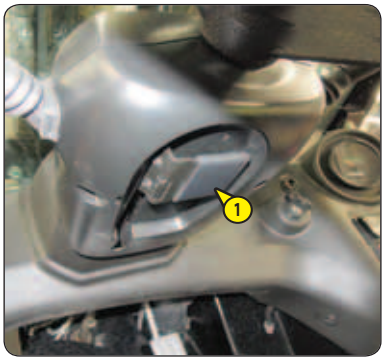

5 - CONTROL AND SIGNAL LIGHTS PANEL

CONTROL INSTRUMENTS

A - HOURMETER

B - FUEL LEVEL

Red zone B1 indicates that you are using the reserve supply and that time of use is limited.

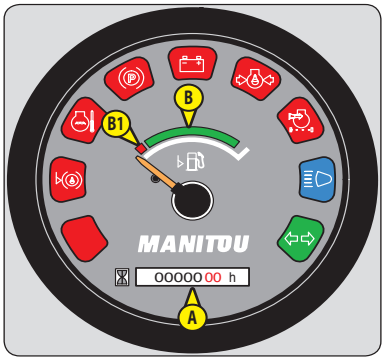

SIGNAL LIGHTS

When the lift truck ignition is switched on, all the red indicator lights and the buzzer on the dashboard should light up.

RED LAMP - HYDRAULIC RETURN FILTER CLOGGED

This lamp may come on when starting the lift truck and in cold weather. It should go off when the hydraulic fluid has reached its operating temperature.

- Stop the lift truck and carry out the necessary repairs (MAINTENANCE).

NOT USED

RED ENGINE WATER TEMPERATURE LAMP

- Stop the engine immediately and search the for the cause of the malfunction in the cooling circuit.

RED PARKING BRAKE INDICATOR LAMP

The parking brake is applied.

RED BATTERY CHARGE FAULT INDICATOR LAMP

- Switch off the engine immediately and check the electrical circuit and the alternator belt.

RED ENGINE OIL PRESSURE WARNING INDICATOR LAMP

- Switch off the engine immediately and search for the cause (check engine oil level, etc.).

RED AIR FILTER CLOGGING INDICATOR LAMP

- Stop the lift truck and carry out the necessary repairs (MAINTENANCE).

BLUE MAIN BEAM LAMP (OPTION)

GREEN INDICATOR LAMP (OPTION)

647690 (29/01/2019)
MC . . D K ST3A S1 / MSI . . D K ST3A S5

6 - SWITCHES

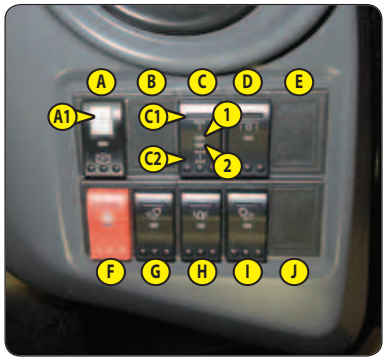

NOTE: The location of the switches may vary depending on the options.

A - PARKING BRAKE

- Press the top of the switch to apply the parking brake. The indicator lamp lights up.
- Lower button A1 and press the bottom of the switch to disengage the parking brake.

B - OPTION

C - OPTION

Only for MC . . -2 D
MSI . . D

C - SWITCHING TO 4WD (low speed) **<-> 2WD** (high speed)

Only for MC . . -4 D

When starting the lift truck, low speed is automatically selected.

C1: HIGH SPEED 24km/h (2WD)

- Press the top of the switch. The indicator lamp 1 will come on.

C2: LOW SPEED 14km/h (4WD)

- Press the bottom of the switch. The indicator lamp 2 will come on.

CONDITIONS OF USE

	FORWARD/REVERSE SELECTOR		
	Forward	**Neutral**	**Reverse gear**
(14 km/h) **4WD --> 2WD** (24 km/h)	Permitted (*)	Permitted (*)	Impossible
(24 km/h) **2WD --> 4WD** (14 km/h)	Permitted (**)	Permitted (**)	Permitted (**)

(*) After minimum 2 seconds.

(**) With the lift truck stopped, press the service brake pedal down 2 inches before performing the manoeuvre.

D - OPTION

Only for MC . . -2 D
MSI . . D

D - DIFFERENTIAL LOCK

Only for MC . . -4 D

If skidding occurs, the differential lock improves traction, whatever the ground conditions (slippery or soft surface, etc.).

- Keep the switch in the bottom position to enable the 4 drive wheels to rotate at the same speed.

E - OPTION

F - HAZARD WARNING LIGHTS OPTION

G - FRONT WORK LIGHTS OPTION

H - REVOLVING LIGHT OPTION

I - REAR WORK LIGHTS OPTION

J - REAR DEFROST OPTION

7 - WARNING ALARM

8 - IGNITION KEY

This switch has 4 positions:

- P - Ignition off, parking position.
- O - Ignition switched off and engine stopped.
- I - Ignition and preheat.
- II - Start-up and return to position I as soon as the key is released.

647690 (29/01/2019)
MC . . D K ST3A S1 / MSI . . D K ST3A S5

9 - EMERGENCY STOP

- Press button 1 to stop the lift truck.
- Turn the button to unlock the emergency stop.

10 - ACCELERATOR PEDAL

11 - BRAKE AND TRANSMISSION CUT-OFF PEDAL

This pedal operates in two steps:

- 1 - Press the pedal gradually to cut off the transmission and slow the lift truck.
- 2 - Continue to press the pedal gradually to brake and stop the lift truck.

12 - FORWARD/NEUTRAL/REVERSE GEAR SELECTION

When changing the direction of travel, the lift truck should be travelling at slow speed and not accelerating.

To start the lift truck, the switch must be in neutral.

A - FORWARD GEAR

- Press the front of the switch.

B - REVERSE GEAR

- Press the back of the switch, the buzzer warns that the truck is reversing, as do optional reversing lights.

C - NEUTRAL

- Lightly press the front or back of the switch.

SAFETY FOR MOVING THE LIFT TRUCK

Movement of the lift truck is only authorised if the operator is present.

To move the lift truck, the following sequence must be observed:

- 1 - Sit correctly in the driver's seat,
- 2 - Fasten the seat belt,
- 3 - Release the parking brake,
- 4 - Engage forward or reverse gear.

To stop the lift truck, the following sequence must be observed:

- 1 - Put the gear lever in neutral,
- 2 - Engage the parking brake,
- 3 - Remove the seat belt,
- 4 - Get out of the lift truck.

If the operator leaves the driver's cab with forward or reverse gear in operation:

- The alarm sounds continuously, the operator may sit back in the seat and continue moving.
- If the alarm sounds discontinuously, the operator must sit back in the seat and reset the forward/reverse selector to neutral before continuing to move.

NOTE: As an option, a safety device on the seat belt fastener prevents movement. A beep signals it is in operation.

AUSTRALIAN SPECIFICATION

If the operator leaves the driver's cab with forward or reverse gear in operation:

- If the alarm sounds continuously, the operator may sit back in the seat and continue moving.
- If the alarm sounds discontinuously, the operator must, before continuing to move:
  - 1 - Reset the forward/reverse selector to neutral,
  - 2 - Sit down correctly in the driver's seat,
  - 3 - Fasten the safety belt,
  - 4 - Release the parking brake,
  - 5 - Engage forward or reverse gear.

13 - HYDRAULIC CONTROLS

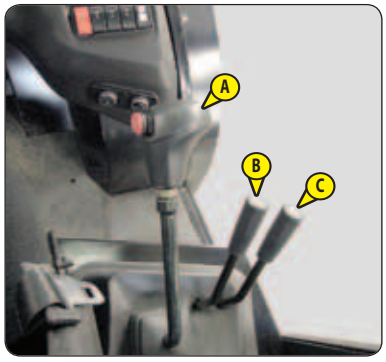

⚠ IMPORTANT ⚠

In the event of a malfunction, consult your dealer.

For your own safety, do not attempt to alter the hydraulic pressure in the system.
ANY MODIFICATION WILL INVALIDATE THE WARRANTY.

The hydraulic controls must be used carefully without jerking, to avoid accidents caused by shaking the lift truck.

Using the hydraulic controls is only possible if the driver is present and seated correctly in the seat.

If the operator is not present in the seat, the hydraulic controls are frozen.

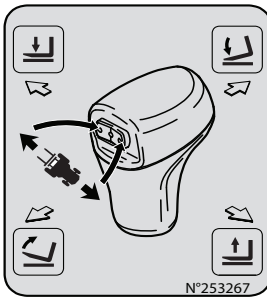

LIFTING THE LOAD
- Pull lever A backwards for lifting.
  As an option the engine speed is automatically increased.
- Push lever A forwards for lowering.

TILTING THE MAST
- Pull lever A to the left to tilt backwards.
- Push lever A to the right to tilt forwards.

ATTACHMENT (option)
- Pull or push lever B forwards or backwards.

ADDITIONAL ATTACHMENT (option)
- Pull or push lever C forwards or backwards.

14 - LOAD CHARTS

For your safety, and before handling any load, consult the load charts provided in the driver's cab.

15 - LEVEL INDICATORS

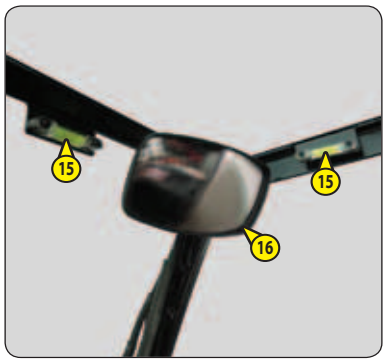

For your safety, and before handling any load, ensure that the lift truck is level.

16 - INSIDE REAR-VIEW MIRROR

17 - BATTERY CUT-OFF

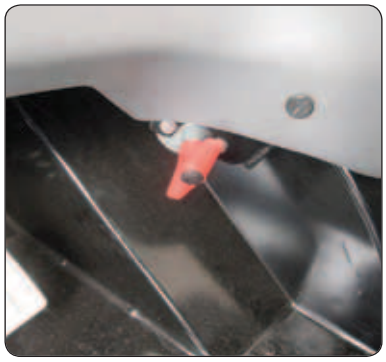

Enables the battery to be rapidly cut off from the electric circuit in the event of a short circuit or a fire.

647690 (29/01/2019)
MC . . D K ST3A S1 / MSI . . D K ST3A S5

18 - 12V SOCKET

NOTE: As an option there is a reading light for a 12 V socket.

19 - DOCUMENT CLIP

20 - DOCUMENT STORAGE NET

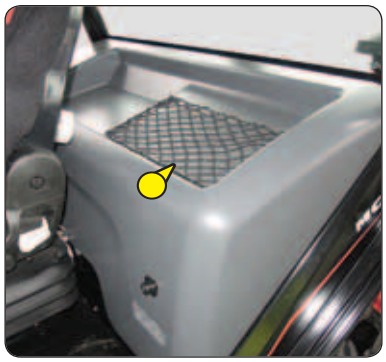

Make sure that the operator's manual is in the right place, i.e. in the document holder net.

NOTE: As an option there is a waterproof document holder.

21 - MOTOR COVER PANEL

NOTE: Cab option, open the side doors before opening the engine cover.

To open the engine cover:

- Fold the seat backrest onto the seat.
- Move the seat forward as far as possible.
- Press button 1 and lift the cover using handle 2.
- Gain access to the engine compartment to service the lift truck, as well as to the fuses and relays.

22 - BATTERY COVER

- Turn the thumb wheel 1.
- Remove battery cover 2.

647690 (29/01/2019)
MC . . D K ST3A S1 / MSI . . D K ST3A S5

23 - FUSES AND RELAYS

- Open the engine cover (◁ COMMAND AND CONTROL INSTRUMENTS).
- Remove air filter cover 1 and the cartridge.
- Loosen the screws and remove cover 2 from the fuse and relay box.

NOTE: OPTION Hydraulic control joystick
- Remove the cover to access the diagnostics plug 3.

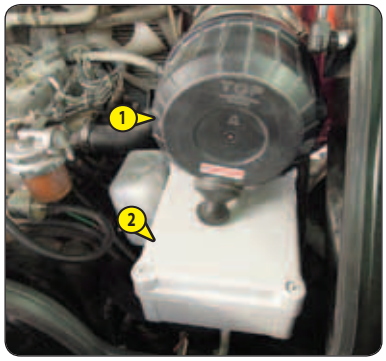

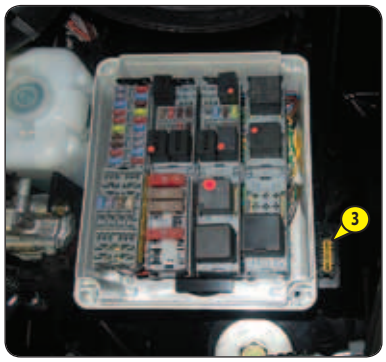

FUSES

⚠ IMPORTANT ⚠

Replace the faulty fuse with a new fuse with the same rating.

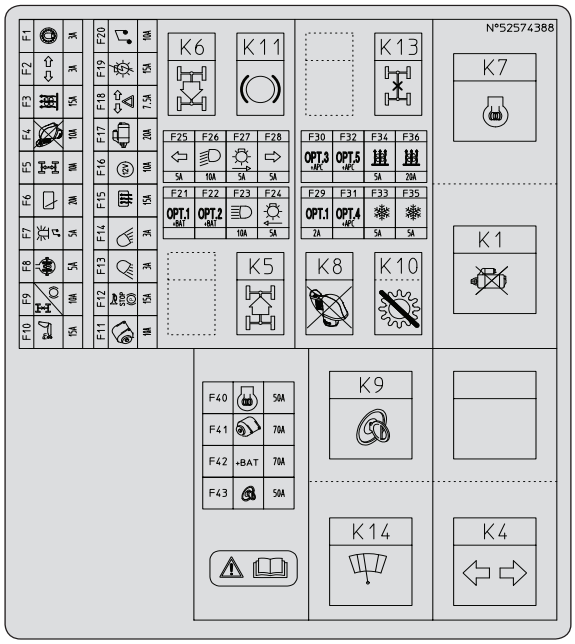

Control fuses

- F1 - Control panel (3A).
- F2 - OPTION Indicator lights (3A).
- F3 - OPTION Ventilation/heating (15A).
- F4 - ISO3691 hydraulic movement cut-off (10A).
- F5 - Forward/neutral/reverse gear selection (10A).
  OPTION Reversing light (10A).
  OPTION Reversing sound alarm (10A).
- F6 - OPTION Front/rear windscreen wiper + washer (20A).
- F7 - OPTION Rotating beacon light (5A).
- F8 - Differential lock (5A). **Only for MC..-4**
- F9 - Transmission and braking module (10A).
  4RM -> 2RM (10A). **Only for MC..-4**
- F10 - OPTION Pneumatic seat (15A).
- F11 - Alternator (10A).
- F12 - Parking brake (15A).
  Sound alarm (15A).
  OPTION Stop switch (15A).
- F13 - OPTION Front working lights (3A).
- F14 - OPTION Rear working lights (3A).
- F15 - OPTION Rear window de-icing (15A).
- F16 - 12V connector (10A).
- F17 - Starter (20A).
- F18 - OPTION Hazard warning lights (7.5A).
- F19 - OPTION Road lights control (15A).
- F20 - OPTION Car radio (10A).
- F21 - OPTION 1 (+) Permanent.
- F22 - OPTION 2 (+) Permanent.
- F23 - OPTION Main headlights (10A).
- F24 - OPTION Left sidelights (5A).
- F25 - OPTION Left indicator lights (5A).
- F26 - OPTION Dipped headlights (10A).
- F27 - OPTION Right sidelights (5A).
- F28 - OPTION Right indicator lights (5A).
- F29 - OPTION 1 Immobiliser (2A).
- F30 - OPTION 3 (+) After ignition key.
- F31 - OPTION 4 (+) After ignition key.
- F32 - OPTION 5 (+) After ignition key.
- F33 - OPTION Ventilation/heating control lights (5A).
- F34 - OPTION Heating/air conditioning unit (5A).
- F35 - OPTION Air conditioning compressor (5A).
- F36 - OPTION Air conditioning condenser (20A).

Power fuses

- F40 - Engine preheating (50A).
- F41 - Alternator (70A).
- F42 - (+) Permanent (70A).
- F43 - General power supply (50A).

RELAYS

- K1 - Ignition safety.
- K4 - OPTION Flashing unit.
- K5 - Forward gear.
- K6 - Reverse gear.
- K7 - Engine preheat.
- K8 - Hydraulic movement cut-off ISO3691.
- K9 - General power supply.
- K10 - Transmission cut-off on brake pedal.
- K11 - Braking.
- K13 - 4WD -> 2WD. **Only for MC . . -4**
- K14 - OPTION Wipers.

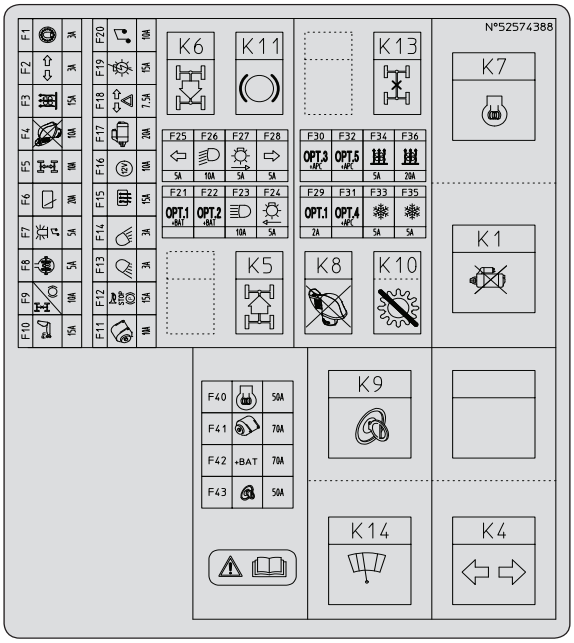

DESCRIPTION (option)

24 - DRIVER'S SEAT

DRIVER'S SEAT "CLASSIC"

DESIGNED FOR MAXIMUM COMFORT, THIS SEAT CAN BE ADJUSTED AS FOLLOWS.

WEIGHT ADJUSTMENT (FIG. A)

It is advised that the weight be adjusted when the driver is not sitting in the cab.

- Refer to graduation 1 of the seat.
- Turn handle 2 according to the driver's weight.

NOTE: To avoid any health problems, it is recommended that the weight adjustment is checked and adjusted before starting the lift truck.

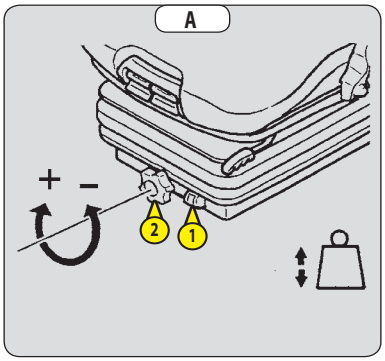

SEAT HEIGHT ADJUSTMENT (FIG. B)

Raise the seat to the desired position, until you hear the ratchet click. If you raise the seat above the last notch (stop), the seat returns to the lowest position.

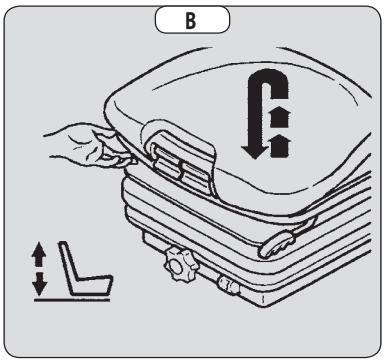

SEAT BACK-REST ANGLE ADJUSTMENT (FIG. C)

The back-rest angle of the seat may be adjusted to suit the individual.

- Press the left-hand button while pushing on the seat or relaxing pressure on the seat to find a comfortable position.

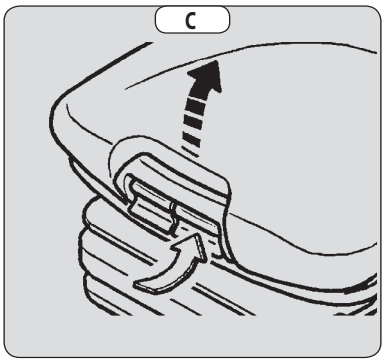

SEAT DEPTH ADJUSTMENT (FIG. D)

The depth of the seat may be adjusted to suit the individual.

- Press the right-hand button while raising or lowering the seat to find the desired position.

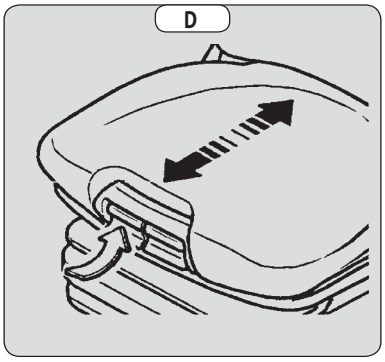

647690 (29/01/2019)
MC . . D K ST3A S1 / MSI . . D K ST3A S5

EXTENDING THE HEAD-REST (FIG. E)

- The height of the head-rest can be adjusted by pulling it upwards (the notches will click) up to the stop.
- The head-rest can be removed by applying sufficient pressure to pull it off the stop.

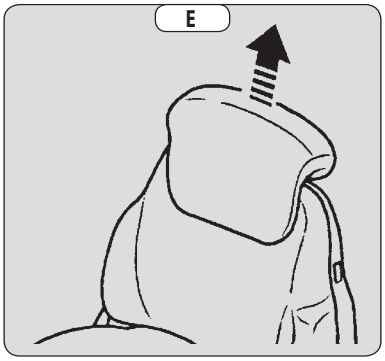

LUMBAR ADJUSTMENT (FIG. F)

This increases the comfort of the seat and the driver's freedom of movement.

- Turn the handle either left or right to adjust the height or depth of the lumbar support.

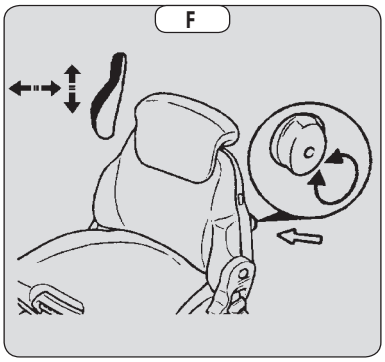

ADJUSTMENT OF THE ANGLE OF THE BACK-REST (FIG. G)

- Support the back-rest, pull the lever and position the back-rest to find the desired position.

⚠ IMPORTANT ⚠

If you do not support the back-rest when making adjustments, it swings completely forwards.

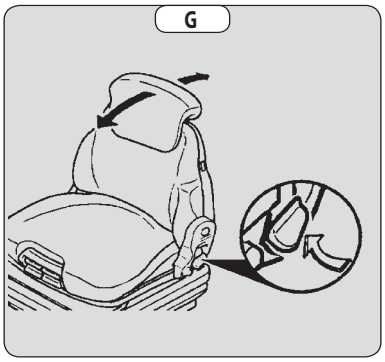

LONGITUDINAL ADJUSTMENT (FIG. H)

- Adjust the locking lever until you reach the position required. This then locks and the seat will not shift into another position.

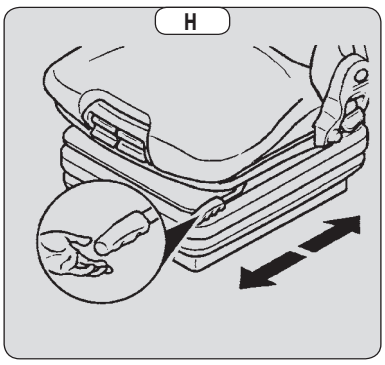

MAINTENANCE (FIG. I)

- Keep your seat clean to ensure it operates efficiently
- Clean the cushions using a suitable product.
- Apply to a small hidden area first, to check the colour-fastness of covering.
- Avoid wetting the cushions.
- To facilitate cleaning remove the cushions from the seat frame.

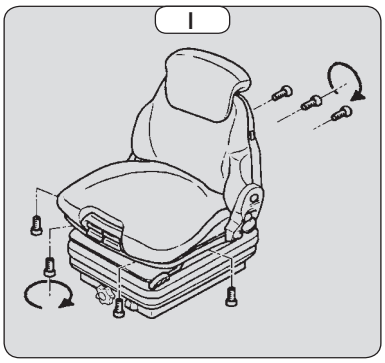

"PREMIUM" DRIVER'S PNEUMATIC SEAT

DESIGNED FOR MAXIMUM COMFORT, THIS SEAT CAN BE ADJUSTED AS FOLLOWS.

WEIGHT ADJUSTMENT (FIG. A)

Adjust the weight when the driver is sitting on the seat.

- Pull the weight adjustment lever 1 fully out.
- Move the weight adjustment lever 1 up to increase the weight or down to reduce it.
- The driver's weight is correctly adjusted when the arrow is in the centre of indicator 2.
- After completing weight adjustment, fully lower the lever 1.

NOTE: To avoid any health problems, it is recommended to check and adjust the weight setting before starting the lift truck.

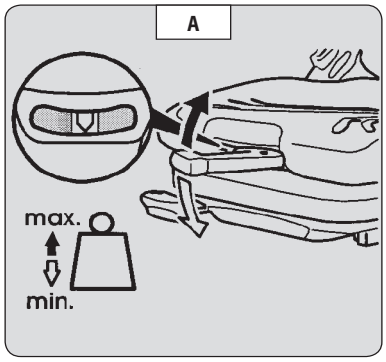

LONGITUDINAL ADJUSTMENT (FIG. B)

⚠ IMPORTANT ⚠

Only operate the lever by its recessed section and do not grasp from below, at the risk of crushing the hand.

- Adjust the locking lever until you reach the position required. This then locks and the seat will not shift into another position.

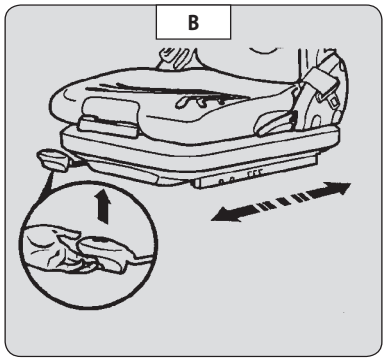

LUMBAR ADJUSTMENT (FIG. C)

This increases the comfort of the seat and the driver's freedom of movement.

- Turn knob to 1 to adjust the height and depth of the lumbar support of the upper part of the back-rest.
- Turn knob to 2 to adjust the height and depth of the lumbar support of the lower part of the back-rest.

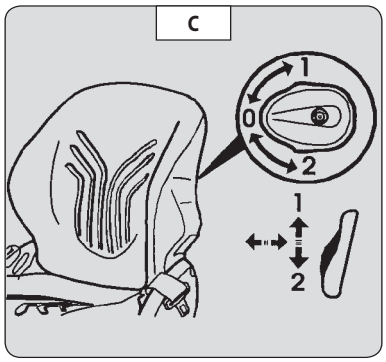

ANGLE ADJUSTMENT OF THE BACK-REST (FIG. D)

⚠ IMPORTANT ⚠

If you do not support the back rest when making adjustments, it will tilt forwards.

- Support the back-rest, pull the lever and position the back-rest to find the desired position.

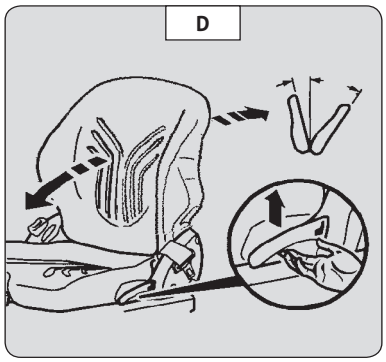

MAINTENANCE

- Keep your seat clean to ensure it operates efficiently
- Clean the cushions using a suitable product.
- Apply to a small hidden area first, to check the colour-fastness of covering.
- Avoid wetting the cushions.

647690 (29/01/2019)
MC.. DK ST3A S1 / MSI.. DK ST3A S5

"ÉLITE" DRIVER'S PNEUMATIC SEAT

NOTE: Do not operate the pneumatic compressor for more than 1 minute.

WEIGHT ADJUSTMENT (FIG. A)

- Sit on the seat.
- Switch on lift truck ignition.
- Pull or push thumb wheel 1 until the green area appears in the indicator lamp 2.

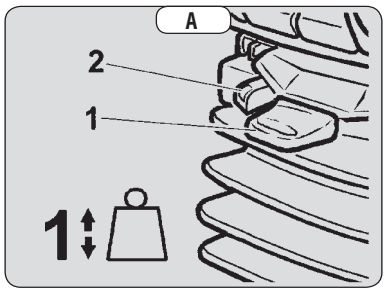

SEAT HEIGHT ADJUSTMENT (FIG. B)

- Keep the ignition on in the lift truck.
- Pull or push thumb wheel 1 to adjust the height of the seat while monitoring the green area of indicator lamp 2.

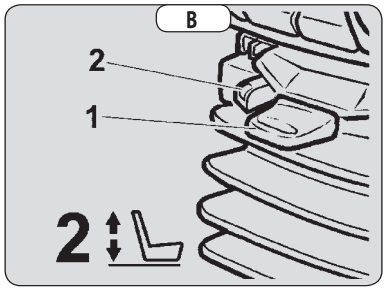

SEAT ANGLE ADJUSTMENT (FIG. C)

- Press the left-hand button, then push or release pressure on the seat to find the desired position.

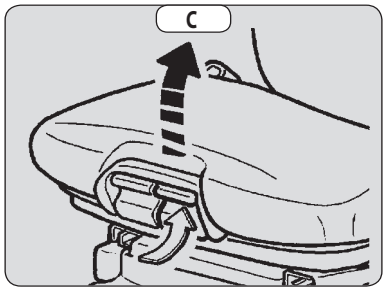

SEAT DEPTH ADJUSTMENT (FIG. D)

- Press the right-hand button, then move the seat backwards or forwards to find the desired position.

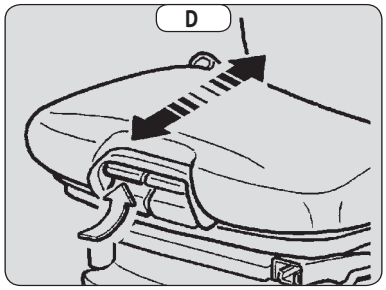

HEAD-REST HEIGHT ADJUSTMENT (FIG. E)

- Pull or push the head-rest to the desired position.

The head-rest can be removed by applying sufficient pressure to pull it off the stop.

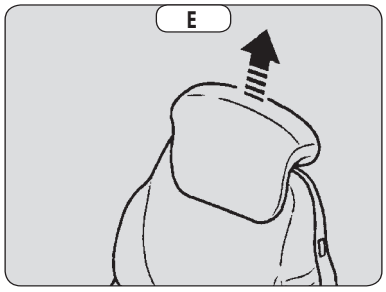

647690 (29/01/2019)
MC . . D K ST3A S1 / MSI . . D K ST3A S5

LUMBAR ADJUSTMENT (FIG. F)

- Turn the handle either left or right to adjust the height and depth to the desired position.

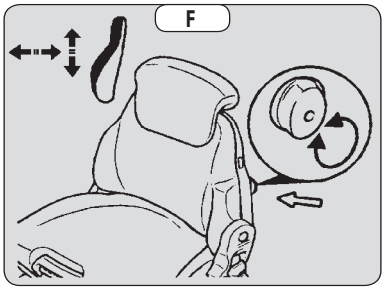

ADJUSTMENT OF THE ANGLE OF THE BACK-REST (FIG. G)

- Support the back-rest, pull the lever and tilt the back-rest to find the desired position.

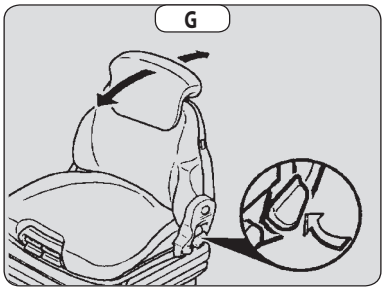

HORIZONTAL SHOCK ABSORBER (FIG. H)

In certain conditions (e.g. rough terrain, etc.) the driver's seat can absorb shocks.

- Turn the button to position 1 to activate the shock absorber.
- Turn the button to position 2 to deactivate the shock absorber.

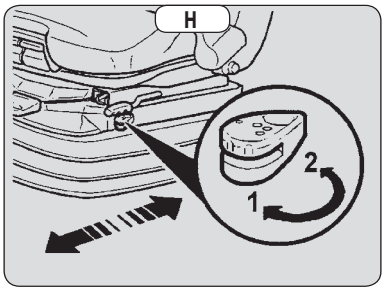

LONGITUDINAL ADJUSTMENT (FIG. I)

- Pull the lever, then move the seat forwards or backwards into the desired position.
- Release the lever to lock it.

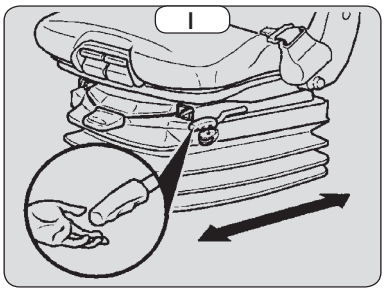

SERVICING (FIG. J)

- Keep your seat clean to ensure it operates efficiently
- Clean the cushions using a suitable product.
- Apply to a small hidden area first, to check the colour-fastness of covering.
- Avoid wetting the cushions.
- To facilitate cleaning remove the cushions from the seat frame.

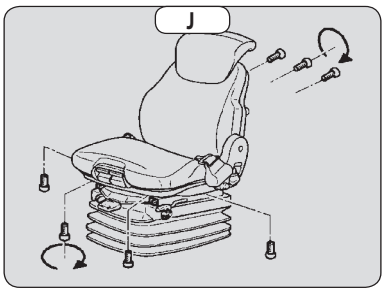

647690 (29/01/2019)
MC.. DK ST3A S1 / MSI.. DK ST3A S5

25 - WINDSCREEN WIPER CONTROL

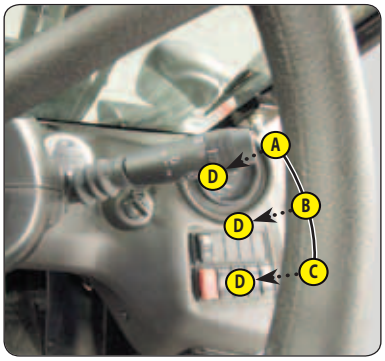

FRONT WINDSCREEN WIPER

- A - Off.
- B - On.
- C - Intermittent.
- D - Windscreen washer (pulsing).

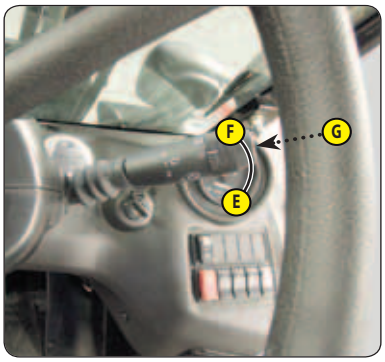

REAR WINDSCREEN WIPER

- E - Off.
- F - On.

ROOF WINDSCREEN WIPER

- G - Roof windscreen wiper and windscreen washer (pulsing).

26 - LIGHTING, HORN AND INDICATOR LIGHT CONTROL

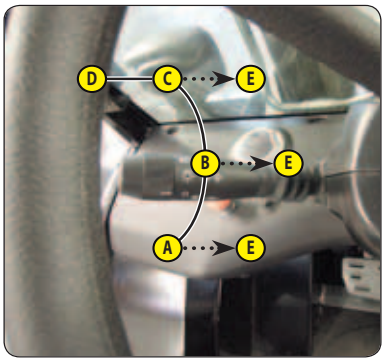

ROAD LIGHTS

The road lights can be used without the ignition key.

- A - Off.
- B - Front and rear side lights.
- C - Dipped beam headlights.
- D - Main beam headlights.
- E - Headlight flashing (pulsing).

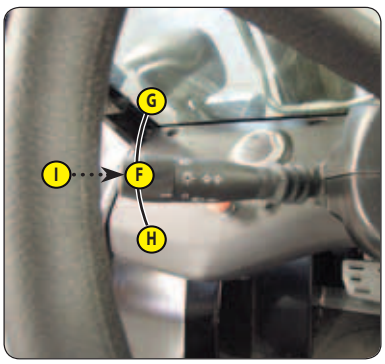

INDICATOR LIGHTS AND SOUND ALARM

- F - Off.
- G - Right indicator lights.
- H - Left indicator lights.
- I - Sound alarm (pulsing).

647690 (29/01/2019)
MC . . D K ST3A S1 / MSI . . D K ST3A S5

27 - ROAD LIGHTS

FRONT HEADLIGHTS

- A - Indicator lights.
- B - Dipped beam headlights.
- C - Main beam headlights.
- D - Side lights.

NOTE: As an option there is a guard for the main beam headlights.

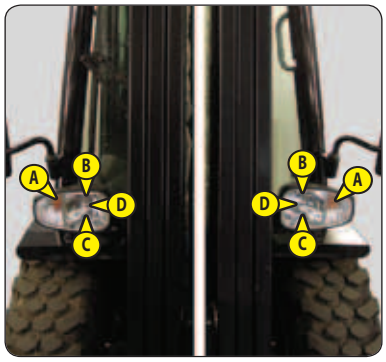

REAR LIGHTS

- A - Indicator lights.
- B - Stop lights.
- C - Side lights.

NOTE: As an option there is a guard for the main beam headlights.

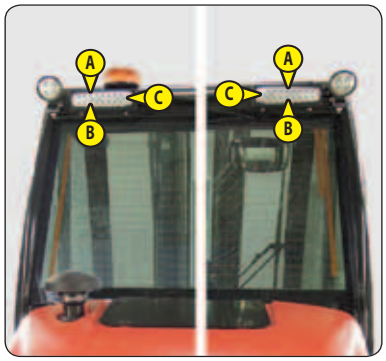

28 - REAR WORKING LIGHTS

NOTE: As an option there is a guard for the rear working lights.

29 - FRONT WORKING LIGHTS

NOTE: As an option there is a guard for the front working lights.

647690 (29/01/2019)
MC . . D K ST3A S1 / MSI . . D K ST3A S5

30 - ROTATING BEACON LIGHT OR LED FLASHING LIGHT

The magnetic rotating beacon light can be fitted by disconnecting plug A.

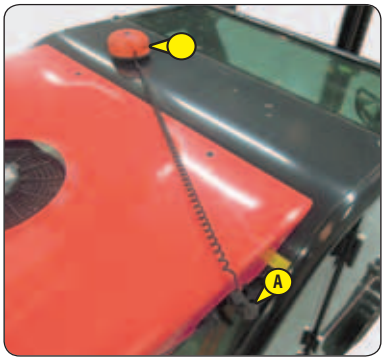

31 - EXTERIOR REAR-VIEW MIRROR

32 - HEATING VENTS

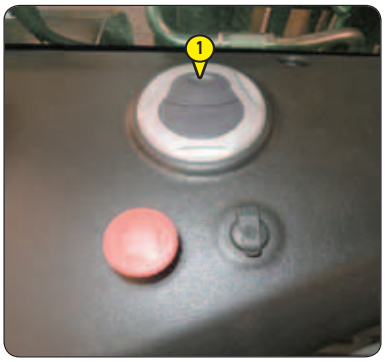

33 - HEATER CONTROL

- A - Temperature adjustment.
- B - Ventilation speed adjustment.

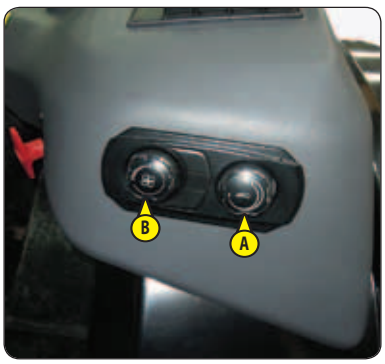

647690 (29/01/2019)
MC . . D K ST3A S1 / MSI . . D K ST3A S5

34 - AIR CONDITIONING CONTROL

⚠ IMPORTANT ⚠

Once a week in winter operate the air conditioning on a one-off basis to guarantee it is operating correctly.

In cold weather, start and warm up the engine before starting the air conditioning to avoid damaging the air conditioning circuit.

If the air conditioning seems to operate irregularly carry out a service (◁ MAINTENANCE) or consult your dealer.

Never try to repair possible faults in the circuit, consult your dealer.

- A - Temperature adjustment.
- B - Ventilation speed adjustment.
- C - On/Off for the air conditioning with indicator lamp.

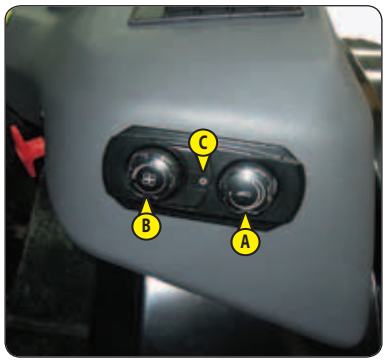

CONDITIONS OF USE:

- The air conditioning only works if the engine is running.
- The doors and windows must be closed.
- The air intakes must not be obstructed (frost, snow, leaves, etc.).
- As a minimum, one cab heating vent must be open to avoid the risk of the air conditioning circuit freezing.

NOTE: Possible water loss under the lift truck are due to the dehumidifying effect of the unit. These losses may vary depending on the exterior temperature and humidity.

35 - DOOR OPENING HANDLES

- Insert the ignition key into lock A to lock or unlock the cab.
- Pull on the handle B or C to open the door.

NOTE: The door must be:

- Either closed.
- Either completely open and locked on the door arrester system.

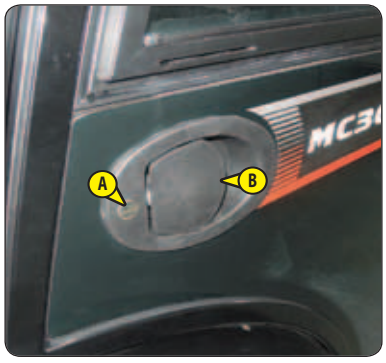

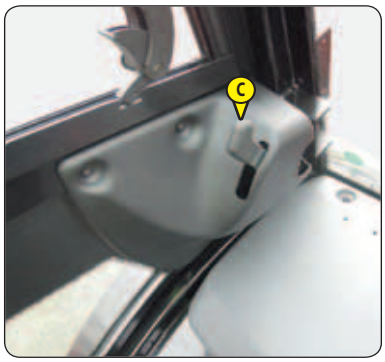

36 - DOOR RELEASE HANDLES

- Pull on the handle A to release and close the door.

647690 (29/01/2019)
MC . . D K ST3A S1 / MSI . . D K ST3A S5

37 - SLIDING WINDOWS ON LEFT-HAND DOOR

- Press the latches A and slide the windows.

38 - HALF-DOOR ON RIGHT-HAND DOOR

- Lower the latch A to open the half-door.

NOTE: The half-door must be:

- Either closed.
- Either completely open and locked on the door arrester system.

39 - CAR RADIO

40 - ENGINE IMMOBILISER SYSTEM

647690 (29/01/2019)
MC . . D K ST3A S1 / MSI . . D K ST3A S5

41 - HYDRAULIC CONTROL JOYSTICK

FORWARD/NEUTRAL/REVERSE GEAR SELECTION

⚠ IMPORTANT ⚠

FORWARD/NEUTRAL/REVERSE GEAR SELECTOR (Standard)

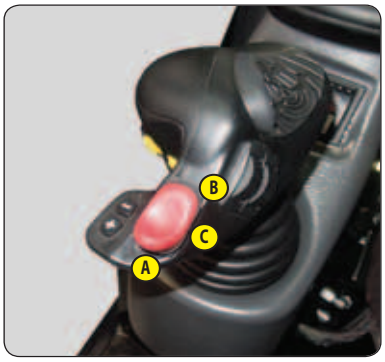

A - FORWARD GEAR
- Press the front of the switch.

B - REVERSE GEAR
- Press the back of the switch, the buzzer warns that the truck is reversing, as does an optional reversing light.

C - NEUTRAL
- Lightly press the front or back of the switch.

HYDRAULIC CONTROLS

⚠ IMPORTANT ⚠

In the event of a malfunction, consult your dealer.

For your own safety, do not attempt to alter the hydraulic pressure in the system.

ANY MODIFICATION WILL INVALIDATE THE WARRANTY.

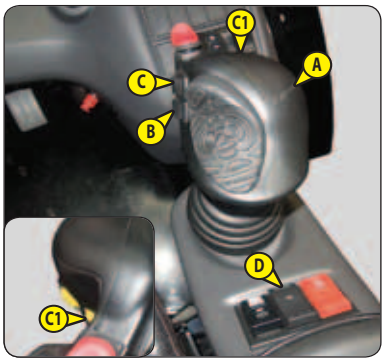

The hydraulic controls must be used carefully without jerking, to avoid accidents caused by shaking the lift truck.

Using the hydraulic controls is only possible if the driver is present and seated correctly in the seat.

LIFTING THE LOAD
- Pull lever A backwards for lifting.
  As an option the engine speed is automatically increased.
- Push lever A forwards for lowering.

TILTING THE MAST
- Pull lever A to the left to tilt backwards.
- Push lever A to the right to tilt forwards.

ATTACHMENT (e.g. side-shift carriage)
- Move button B forwards or backwards.

OPTION ADDITIONAL ATTACHMENT (4TH ELEMENT)
- Move button C forwards or backwards.

OPTION ADDITIONAL ATTACHMENT (5TH ELEMENT)
- Hold button C1 down and move the button C forwards or backwards.

HYDRAULIC MOVEMENT NEUTRALISATION
- Press switch d, the indicator lamp D1 comes on.

647690 (29/01/2019)
MC . . D K ST3A S1 / MSI . . D K ST3A S5

DIFFERENTIAL LOCK

Only for MC . . -4 D

⚠ IMPORTANT ⚠

When it is being used, always drive in a straight line and slowly.

If skidding occurs, the differential lock improves traction, whatever the ground conditions (slippery or soft surface, etc.).

- Hold switch 1 down to enable the 4 drive wheels to rotate at the same speed.

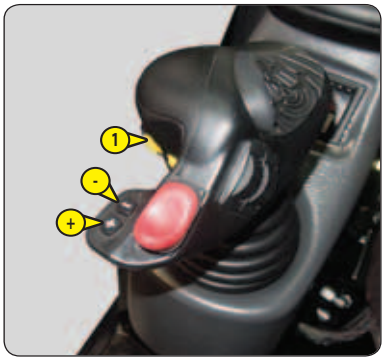

SWITCHING TO 4WD (low speed) <-> *2WD* (high speed)

When starting the lift truck, low speed is automatically selected.

HIGH SPEED 24km/h (2WD)

- Press the "+" switch or the top of switch 2. The indicator lamp 2a will come on.

LOW SPEED 14km/h (4WD)

- Press the "-" switch or the top of switch 3. The indicator lamp 3a will come on.

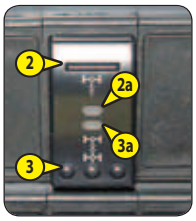

CONDITIONS OF USE

	FORWARD/REVERSE SELECTOR		
	Forward	**Neutral**	**Reverse gear**
(14 km/h) **4WD --> 2WD** (24 km/h)	Permitted (*)	Permitted (*)	Impossible
(24 km/h) **2WD --> 4WD** (14 km/h)	Permitted (**)	Permitted (**)	Permitted (**)

(*) After minimum 2 seconds.

(**) With the lift truck stopped, press the service brake pedal down 2 inches before performing the manoeuvre.

647690 (29/01/2019)
MC . . D K ST3A S1 / MSI . . D K ST3A S5

SLINGING AND SECURING PIN

⚠ IMPORTANT ⚠

This lift truck is not intended for use with a trailer.

This device is used only for slinging and lashing the lift truck (◁OCCASIONAL OPERATION).

IF NECESSARY, CONSULT YOUR DEALER.

3 - MAINTENANCE

647690 (29/01/2019)
MC . . D K ST3A S1 / MSI . . D K ST3A S5

3 - MAINTENANCE

ORIGINAL MANITOU SPARE PARTS AND EQUIPMENT 3-3

FORKLIFT TRUCK MAINTENANCE 3-4

DAILY AND WEEKLY MAINTENANCE 3-4

MANDATORY FIRST 500 HOURS OR 6 MONTHS SERVICE 3-5

PERIODIC SERVICE 3-6

OCCASIONAL MAINTENANCE AND OPERATION 3-8

FILTER CARTRIDGES AND BELTS 3-9

LUBRICANTS AND FUEL 3-10

➲ 10H - DAILY SERVICING OR EVERY 10 HOURS OF SERVICE 3-12

➲ 50H - WEEKLY SERVICING OR EVERY 50 HOURS OF SERVICE 3-14

➲ ❶ 500 H - ROUTINE SERVICING - EVERY 500 HOURS OF SERVICE OR 1 YEAR 3-20

➲ ❷ 1,000 H - ROUTINE SERVICING - EVERY 1,000 HOURS OF SERVICE OR 2 YEARS 3-26

➲ ❸ 2,000 H - ROUTINE SERVICING - EVERY 2,000 HOURS OF SERVICE OR 4 YEARS 3-30

➲ OCCASIONAL SERVICE 3-34

➲ OCCASIONAL OPERATION 3-38

647690 (29/01/2019)
MC . . D K ST3A S1 / MSI . . D K ST3A S5

ORIGINAL MANITOU SPARE PARTS AND EQUIPMENT

OUR LIFT TRUCKS MUST BE SERVICED USING ORIGINAL MANITOU PARTS.

BY ALLOWING THE USE OF NON ORIGINAL MANITOU PARTS, YOU RISK:

⚠ IMPORTANT ⚠

THE USE OF COUNTERFEIT PARTS OR COMPONENTS NOT APPROVED BY THE MANUFACTURER,

MEANS LOSS OF THE CONTRACTUAL GUARANTEE BENEFITS.

- Legally - to be held responsible in the event of an accident.
- Technically - to cause operating malfunctions or shorten the life of the lift truck.

BY USING ORIGINAL MANITOU PARTS FOR MAINTENANCE OPERATIONS, YOU BENEFIT FROM OUR KNOW-HOW

Through its network, MANITOU provides the user with,

- Know-how and competence.
- The guarantee of high-quality work.
- Original replacement parts.
- Help with preventive maintenance.
- Efficient help with diagnosis.
- Improvements due to experience feedback.
- Operator training.
- Only the MANITOU network has detailed knowledge of the design of the lift truck and therefore the best technical ability to provide maintenance.

⚠ IMPORTANT ⚠

ORIGINAL REPLACEMENT PARTS ARE DISTRIBUTED EXCLUSIVELY BY MANITOU AND ITS DEALER NETWORK.

The dealer network list is available on the MANITOU web site: www.manitou.com

FORKLIFT TRUCK MAINTENANCE

DAILY AND WEEKLY MAINTENANCE

⚠ IMPORTANT ⚠

THE OPERATOR IS AUTHORISED TO CARRY OUT THIS MAINTENANCE.

These services enable the operator to keep the lift truck in a clean and safe condition.

MANDATORY FIRST 500 HOURS OR 6 MONTHS SERVICE

⚠ IMPORTANT ⚠

THIS SERVICE MUST BE CARRIED OUT AFTER THE FIRST 500 HOURS OF SERVICE OR WITHIN THE 6 MONTHS FOLLOWING THE START-UP OF THE MACHINE (WHICHEVER OCCURS FIRST).

PERIODIC SERVICE

⚠ IMPORTANT ⚠

THE PERIODIC SERVICE MUST BE CARRIED OUT BY AN APPROVED PROFESSIONAL FROM THE MANITOU NETWORK

MAINTENANCE SCHEDULE

This schedule enables the operator to keep up with the periodic maintenance of the lift truck by notifying the total number of hours of operation and the date of the service performed by the professional approved by the MANITOU network.

OCCASIONAL MAINTENANCE AND OPERATION

These maintenance tasks and operations are to be performed as required for the safety and upkeep of the lift truck.

DAILY AND WEEKLY MAINTENANCE

10H - DAILY SERVICING OR EVERY 10 HOURS OF SERVICE

- CHECK	Lift truck environment	3-12
- CHECK	Engine oil level	3-12
- CHECK	Coolant level	3-13
- CHECK	Fuel level	3-13
- CLEAN	Cyclonic pre-filter (option)	3-13
- CLEAN	Driver's cab	3-13

50H - WEEKLY MAINTENANCE OR EVERY 50 HOURS OF SERVICE

- CHECK	Alternator/fan/crankshaft belt tension	3-14
- CHECK	Compressor belt tension (Air conditioning OPTION)	3-14
- CHECK	Tyre pressures	3-15
- CHECK	Wheel nut tightening	3-15
- CHECK	Hydraulic oil level	3-15
- CHECK	Washer fluid level (option)	3-15
- CHECK - ADJUST	Tension and alignment of the mast lifting chains	3-16
- CLEAN	Fuel pre-filter	3-16
- CLEAN	Radiator core	3-16
- CLEAN	Condenser harness (Air conditioning OPTION)	3-17
- CLEAN/CHECK	Dry air filter cartridge	3-17
- LUBRICATE	General lubrication	3-18
- REPLACE	Engine oil **	3-19
- REPLACE	Engine oil filter **	3-19

*** Only perform for the first 50 hours of service and then every 500 hours of service or 1 year.*

647690 (29/01/2019)
MC . . D K ST3A S1 / MSI . . D K ST3A S5

MANDATORY FIRST 500 HOURS OR 6 MONTHS SERVICE

FIRST 500 HOURS BEFORE THE FIRST 6 MONTHS

- If the lift truck has reached the first 500 hours of service before the first 6 months have expired, perform both the mandatory service and routine 500 H service (➪ 1 500H - PERIODIC SERVICE - EVERY 500 HOURS OF SERVICE OR 1 YEAR).

FIRST 6 MONTHS BEFORE THE FIRST 500 HOURS

- If the lift truck has not completed 500 hours of service in the first 6 months, just carry out the mandatory service.

➪ MANDATORY SERVICE

- CHECK	Fuel level	3-13
- CLEAN	Cyclonic pre-filter (option)	3-13
- CLEAN	Driver's cab	3-13
- CHECK	Alternator/fan/crankshaft belt tension	3-14
- CHECK	Compressor belt tension (Air conditioning OPTION)	3-14
- CHECK	Tyre pressures	3-15
- CHECK	Wheel nut tightening	3-15
- CHECK	Hydraulic oil level	3-15
- CHECK	Washer fluid level (option)	3-15
- CHECK - ADJUST	Tension and alignment of the mast lifting chains	3-16
- CLEAN	Radiator core	3-16
- CLEAN	Condenser harness (Air conditioning OPTION)	3-17
- CLEAN/CHECK	Dry air filter cartridge	3-17
- LUBRICATE	General lubrication	3-18
- GREASE	Mast lifting chains	3-20
- LUBRICATE	Cab door locks (option)	3-20
- REPLACE	Engine oil	3-21
- REPLACE	Engine oil filter	3-21
- REPLACE	Fuel filter	3-22
- REPLACE	Fuel pre-filter	3-22
- REPLACE	Hydraulic return oil filter cartridge	3-23
- CHECK	Fork wear *	3-24
- CHECK	Seat belt	3-26
- CHECK	Engine silent blocks *	3-28
- CHECK	Engine speeds *	3-28
- CHECK	Engine valve clearances *	3-28
- CHECK	Condition of wheels and tyres *	3-28
- REPLACE	Hydraulic oil tank suction strainer *	3-28
- CHECK	Speeds of hydraulic movements *	3-28
- CHECK	Condition of hoses and flexible pipes *	3-28
- CHECK	Condition of cylinders (leakage, rods) *	3-28
- CHECK	Condition of wiring harnesses and cables *	3-28
- CHECK	Lights and signals (option) *	3-28
- CHECK	Warning indicators *	3-28
- CHECK	Condition of the rear view mirrors *	3-29
- CHECK	Cabin structure *	3-29
- CHECK	Frame structure *	3-29
- CHECK	Attachment carriage *	3-29
- CHECK	Condition of attachments *	3-29

**** Consult your dealer.***

647690 (29/01/2019)
MC . . D K ST3A S1 / MS1 . . D K ST3A S5

PERIODIC SERVICE

MAINTENANCE SCHEDULE

	OR					
WHEN DUE ➲	FIRST 6 MONTHS	FIRST 500 HOURS	500 H or 1 YEAR	1000 H or 2 YEARS	1500 H or 3 YEARS	2000 H or 4 YEARS
PERIODIC SERVICE ➲	MANDATORY SERVICE	MANDATORY SERVICE + ❶	❶	❶+❷	❶	❶+❷+❸
MACHINE COUNTER ➲						
DATE OF SERVICING ➲						

WHEN DUE ➲	2500 H or 5 YEARS	3000 H or 6 YEARS	3500 H or 7 YEARS	4000 H or 8 YEARS	4500 H or 9 YEARS	5000 H or 10 YEARS	5500 H or 11 YEARS
PERIODIC SERVICE ➲	❶	❶+❷	❶	❶+❷+❸	❶	❶+❷	❶
MACHINE COUNTER ➲							
DATE OF SERVICING ➲							

WHEN DUE ➲	6000 H or 12 YEARS	6500 H or 13 YEARS	7000 H or 14 YEARS	7500 H or 15 YEARS	8000 H or 16 YEARS	8500 H or 17 YEARS	9000 H or 18 YEARS
PERIODIC SERVICE ➲	❶+❷+❸	❶	❶+❷	❶	❶+❷+❸	❶	❶+❷
MACHINE COUNTER ➲							
DATE OF SERVICING ➲							

➲ ❶ 500 H - ROUTINE SERVICING - EVERY 500 HOURS OF SERVICE OR 1 YEAR

- CHECK — Hydraulic oil 3-20
- GREASE — Mast lifting chains 3-20
- LUBRICATE — Cab door locks (option) 3-20
- REPLACE — Engine oil 3-21
- REPLACE — Engine oil filter 3-21
- REPLACE — Fuel filter 3-22
- REPLACE — Fuel pre-filter 3-22
- REPLACE — Hydraulic return oil filter cartridge 3-23
- REPLACE — Cab fan filters (option) 3-23
- CHECK — Fork wear * 3-24

** Consult your dealer.*

647690 (29/01/2019)
MC . . D K ST3A S1 / MSI . . D K ST3A S5

➲ ❷ 1,000 H - ROUTINE SERVICING - EVERY 1,000 HOURS OF SERVICE OR 2 YEARS

ALSO PERFORM THE 500 HOUR PERIODIC MAINTENANCE OPERATIONS.

- CHECK — Seat belt 3-26
- CLEAN — Fuel tank 3-26
- REPLACE — Coolant 3-27
- REPLACE — Dry air filter cartridge 3-28
- CHECK — Engine silent blocks * 3-28
- CHECK — Engine speeds * 3-28
- CHECK — Engine valve clearances * 3-28
- CHECK — Condition of wheels and tyres * 3-28
- REPLACE — Hydraulic oil tank suction strainer * 3-28
- CHECK — Speeds of hydraulic movements * 3-28
- CHECK — Condition of hoses and flexible pipes * 3-28
- CHECK — Condition of cylinders (leakage, rods) * 3-28
- CHECK — Condition of wiring harnesses and cables * 3-28
- CHECK — Lights and signals (option) * 3-28
- CHECK — Warning indicators * 3-28
- CHECK — Condition of the rear view mirrors * 3-29
- CHECK — Cabin structure * 3-29
- CHECK — Frame structure * 3-29
- CHECK — Attachment carriage * 3-29
- CHECK — Condition of attachments * 3-29

Consult your dealer.

➲ ❸ 2,000 H - ROUTINE SERVICING - EVERY 2,000 HOURS OF SERVICE OR 4 YEARS

ALSO PERFORM THE 500 HOUR AND 1,000 HOUR PERIODIC SERVICE OPERATIONS.

- CHECK — Wheel nut tightening torques 3-30
- REPLACE — Dry air filter safety cartridge 3-30
- REPLACE — Hydraulic oil 3-30
  - REPLACE — Hydraulic oil tank filter cap 3-30
- CHECK — Injection pump * 3-31
- CHECK — Injectors * 3-31
- CHECK — Radiator * 3-31
- CHECK — Water pump and thermostat * 3-31
- CHECK — Alternator and starter * 3-31
- CHECK — Hydrostatic transmission circuit pressures * 3-31
- CHECK — Hydrostatic transmission control flow * 3-31
- CHECK — Hydrostatic transmission / accelerator cut-off operation * 3-31
- CHECK — Steering * 3-31
- CHECK — Kingpins (MC 18-2) 3-31
- CHECK — Wheel motor pivots (MC 18-4) 3-31
- CHECK — Rear axle * 3-31
- CHECK — Disc brake wear on wheel motors * 3-31
- CHECK — Condition of boom assembly * 3-31
- CHECK — Mast lifting chains * 3-31
- CHECK — Mast lifting chain pulleys * 3-31
- CHECK — Mast guide rollers * 3-31
- CHECK — Mast bearing rollers * 3-31
- CHECK — Thickness of the mast wearing plates * 3-31
- CHECK — Hydraulic circuit pressures * 3-32
- CHECK — Hydraulic circuit flow rates * 3-32
- CHECK — Bearings and bushings * 3-32
- CLEAN — Air conditioning (OPTION) * 3-32
- CLEAN/CHECK — Hydraulic oil tank and strainer * 3-32

Consult your dealer.

647690 (29/01/2019)
MC . . D K ST3A S1 / MSI . . D K ST3A S5

OCCASIONAL MAINTENANCE AND OPERATION

OCCASIONAL SERVICE

- CLEAN — Engine compartment 3-34
- CLEAN — Inside of the frame 3-34
- REPLACE — Wheels 3-34
- REPLACE — Battery 3-35
- BLEED — Fuel supply circuit 3-36
- ADJUST — Front headlights 3-36

OCCASIONAL OPERATION

- TOW — Lift truck 3-38
- SLING — Lift truck 3-39
- TRANSPORT — Lift truck 3-39

647690 (29/01/2019)
MC . . D K ST3A S1 / MSI . . D K ST3A S5

FILTER CARTRIDGES AND BELTS

➲ ❶ 500H - PERIODIC SERVICE - EVERY 500 HOURS OF SERVICE

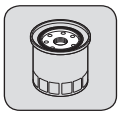
ENGINE OIL FILTER
Part number: 272192

FUEL FILTER CARTRIDGE
Part number: 748087

FUEL PRE-FILTER CARTRIDGE
Part number: 942722

ALTERNATOR BELT
Part number: 942714

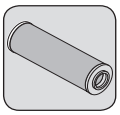
HYDRAULIC RETURN OIL FILTER CARTRIDGE
Part number: 52555157

CAB INTERIOR VENTILATION FILTER (option)
Part number: 52577675

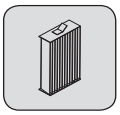
CAB EXTERIOR VENTILATION FILTER (option)
Part number: 52640879

COMPRESSOR BELT
(Air-conditioning option)
Part number: 52596849

➲ ❷ 1000H - PERIODIC SERVICE - EVERY 1,000 HOURS OF SERVICE OR 2 YEARS

ALSO ADD FILTER ELEMENTS FOR PERIODIC SERVICE AFTER 500 HOURS OF SERVICE.

DRY AIR FILTER CARTRIDGE
Part number: 227959

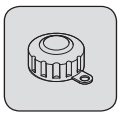
FILTER CAP FOR HYDRAULIC FLUID TANK
Part number: 62415

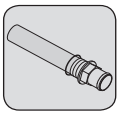
SUCTION STRAINER FOR HYDRAULIC OIL TANK
Part number: 52550828

➲ ❸ 2000H - PERIODIC SERVICE - EVERY 2,000 HOURS OF SERVICE OR 4 YEARS

ALSO ADD FILTER ELEMENTS FOR PERIODIC SERVICE AT 500 HOURS AND 1,000 HOURS OF SERVICE.

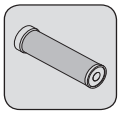
SAFETY DRY AIR FILTER CARTRIDGE
Part number: 227960

➲ OCCASIONAL SERVICE

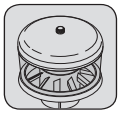
CYCLONIC PRE-FILTER (OPTION)
Part number: 52519289

SELF-CLEANING PRE-FILTER (OPTION)
Part number: 240334

647690 (29/01/2019)
MC . . D K ST3A S1 / MSI . . D K ST3A S5

LUBRICANTS AND FUEL

⚠ IMPORTANT ⚠

USE THE RECOMMENDED LUBRICANTS AND FUEL:
- For topping up, oils may not be miscible.
- For oil changes, MANITOU oils are perfectly appropriate.

DIAGNOSTIC ANALYSIS OF OILS

If a service or maintenance contract has been set up with the dealer, a diagnostic analysis of engine, transmission and axle oils may be requested depending on the rate of use.

(*) REQUIRED FUEL SPECIFICATION

Use a high-quality fuel to obtain optimal performance of the engine.

- EN590 diesel fuel (sulphur content < 10 ppm).
- ASTM D975 diesel fuel (sulphur content < 15 ppm).

RECOMMENDATION

ENGINE

PARTS TO BE LUBRICATED	CAPACITY	RECOMMENDATION
		-40 °C -30 -20 -10 0 +10 +20 +30 +40 +50 °C
ENGINE	8.3 Litres	0W30 0W40 5W30 5W40 10W30 MANITOU PREMIUM OIL 15W40 API CI4 20W50
		-40 °C -30 -20 -10 0 +10 +20 +30 +40 +50 °C
COOLING CIRCUIT	Litres	COOLANT -35 °C
		-40 °C -30 -20 -10 0 +10 +20 +30 +40 +50 °C
FUEL TANK	71 Litres	DIESEL OIL *

MAST

PARTS TO BE LUBRICATED	RECOMMENDATION
	-40 °C -30 -20 -10 0 +10 +20 +30 +40 +50 °C
MAST LIFTING CHAINS	MANITOU SPECIAL CHAINS LUBRICANT
	-40 °C -30 -20 -10 0 +10 +20 +30 +40 +50 °C
GREASING OF THE MAST	MANITOU BLACK MULTI-PURPOSE LUBRICANT

HYDRAULICS

PARTS TO BE LUBRICATED	CAPACITY	RECOMMENDATION
		-40 °C -30 -20 -10 0 +10 +20 +30 +40 +50 °C
HYDRAULIC OIL TANK	66 Litres	ISO VG 100 ISO VG 68 MANITOU ISO VG 46 HYDRAULIC OIL ISO VG 37 ISO VG 32

OVERHEAD GUARD

PARTS TO BE LUBRICATED	CAPACITY	RECOMMENDATION
WINDSCREEN WASHER TANK	2 Litres	WINDSCREEN WASHER LIQUID

REAR AXLE MC..-2 / MSI..

PARTS TO BE LUBRICATED	RECOMMENDATION
	-40 °C -30 -20 -10 0 +10 +20 +30 +40 +50 °C
SWIVEL PINS	MANITOU BLUE MULTI-PURPOSE LUBRICANT

REAR AXLE MC..-4

PARTS TO BE LUBRICATED	RECOMMENDATION
	-40 °C -30 -20 -10 0 +10 +20 +30 +40 +50 °C
WHEEL REDUCTION GEAR PIVOTS	MANITOU BLUE MULTI-PURPOSE LUBRICANT

647690 (29/01/2019)
MC..D K ST3A S1 / MSI..D K ST3A S5

PACKAGING

OIL						
PRODUCT	PACKAGING / PART NO.					
	1 Litre	2 Litres	5 Litres	20 Litres	55 Litres	209 Litres
MANITOU PREMIUM OIL 15W40 API CI4			895831	895832	895833	895834
MANITOU ISO VG 46 HYDRAULIC OIL			545500	582297	546108	546109

GREASE						
PRODUCT	PACKAGING / PART NO.					
	400 ML	400 GR	1 KG	5 KG	20 KG	50 KG
MANITOU BLACK MULTI-PURPOSE LUBRICANT		947766	161590			499235
MANITOU BLUE MULTI-PURPOSE LUBRICANT		161589	720683	554974	499233	489670
MANITOU SPECIAL CHAINS LUBRICANT	554271					

LIQUID						
PRODUCT	PACKAGING / PART NO.					
	1 Litre	2 Litres	5 Litres	20 Litres	55 Litres	210 Litres
COOLANT -35 °C			894967	894968		894969
WINDSCREEN WASHER LIQUID	490402		486424			

647690 (29/01/2019)
MC . . D K ST3A S1 / MSI . . D K ST3A S5

10H - DAILY SERVICING OR EVERY 10 HOURS OF SERVICE

CHECK — Lift truck environment

IMPORTANT

Follow the operator instructions (OPERATOR INSTRUCTIONS).

- Carry out a general inspection of the lift truck:
  - Fluid leaks or stains on the ground.
  - Additional objects on the lift truck and in the driver protection or the cab.
  - Mounting and adjustment of lights and rear view mirrors.
  - Mounting and locking of the attachment.
  - Condition of the tyres, to detect cuts, blisters, wear, etc.
- According to the conditions of use and the environment, ensure that the lift truck is clean:
  - Cleanliness of lights, rear view mirrors, and windows.
  - Cleanliness of the driver's cab (10H - DAILY MAINTENANCE).
  - Cleanliness of the engine housing and inside the frame (OCCASIONAL MAINTENANCE) to prevent leaks and build-up of materials (e.g. straw, flour, sawdust, organic waste, etc.).

IMPORTANT

Particular attention should be paid to accumulations of flammable materials and fuel or lubricant leaks.

They increase the fire risk considerably.

CHECK — Engine oil level

Place the lift truck on level ground with the engine stopped, and allow the engine to cool.

- Open the engine cover (COMMAND AND CONTROL INSTRUMENTS).
- Pull out dipstick 1.
- Clean the dipstick and check the correct level between the two notches.
- If necessary, add oil (LUBRICANTS AND FUEL).
- Remove the access panel 2.
- Add oil through filling hole 3.
- Visually check that there is no leakage or seepage of oil in the engine.

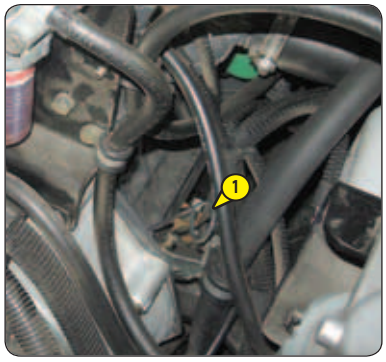

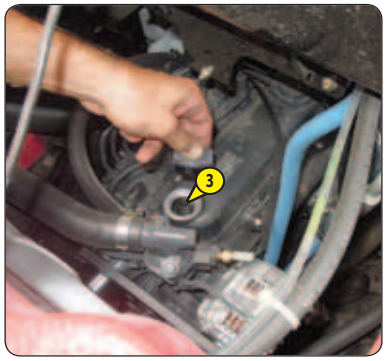

647690 (29/01/2019)
MC . . D K ST3A S1 / MSI . . D K ST3A S5

CHECK — Coolant level

Place the lift truck on level ground with the engine stopped, and allow the engine to cool.

⚠ IMPORTANT ⚠

To avoid any risk of spraying or scalding, wait until the engine has cooled down before removing the cooling system filler plug.

In the event of an emergency, it is possible to use water as the coolant, but then replace with coolant as quickly as possible (◁ 2,000 H - PERIODIC SERVICE).

- Open the engine cover (◁ COMMAND AND CONTROL INSTRUMENTS).
- The liquid must be at the MAXIMUM level on the expansion tank 1.
- If necessary, add coolant (◁ LUBRICANTS AND FUEL).
- Add coolant via filler port 2.
- Visually check that there is no leakage in the radiator and pipes.

CHECK — Fuel level

As far as possible, keep the fuel tank well filled in order to reduce condensation.

- Remove cap 1.
- Fill the fuel tank with clean fuel (◁ LUBRICANTS AND FUEL), filtered through a strainer or a clean, lint free cloth, through filler port 2.
- Put the cap 1 back.
- Visually check that there is no leakage in the tank and pipes.

⚠ IMPORTANT ⚠

Never smoke or approach with a flame during filling operations or when the tank is open.
Never refill while engine is running.

The fuel tank is degassed via the filling hole. When changing it, always use an original plug with a degassing hole.

CLEAN — Cyclonic pre-filter (option)

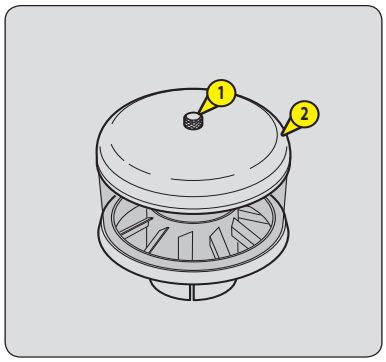

The frequency of cleaning is given as an example. However, as soon as impurities reach the MAX level on the tank, the pre-filter must be emptied and cleaned.

⚠ IMPORTANT ⚠

When cleaning, take care not to let impurities into the dry air filter.

- Loosen nut 1 remove cover 2 and empty the tank.
- Clean the pre-filter unit with a clean dry cloth.
- Refit the unit.

CLEAN — Driver's cab

The frequency of cleaning is given as an example.

⚠ IMPORTANT ⚠

Do not use a high pressure cleaner or water jet.

Take precautions with electrical and electronic components.

- Clean the inside of the overhead guard or the cab using a small brush, vacuum cleaner and a cloth.

NOTE: As a cap option, protect the cab ventilation filter located under the floor mat.

647690 (29/01/2019)
MC . . D K ST3A S1 / MSI . . D K ST3A S5

50H - WEEKLY SERVICING OR EVERY 50 HOURS OF SERVICE

CHECK — Alternator/fan/crankshaft belt tension

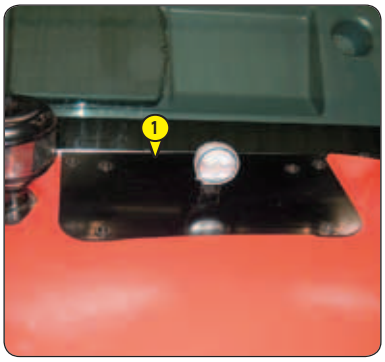

IMPORTANT

If the compressor belt has to be changed, check the tension again after the first 20 hours of operation.

- Open the engine cover (◁ COMMAND AND CONTROL INSTRUMENTS).
- Remove the access panel 1.
- Check the belt for signs of wear and cracks and change if necessary (◁ FILTER CARTRIDGES AND BELTS).
- Check the belt tension between the crankshaft and alternator pulleys, i.e.
  - Under normal thumb pressure (98 N), measure the clearance A of between 7 and 9 mm.
  - Using the MANITOU tension meter (Part No. 895692), measure the value 130 Hz.
- If required, adjust the belt.
- Loosen screws 2 by two to three turns.
- Swivel the alternator assembly so as to obtain the required belt tension.
- Retighten screws 2 (tightening torque 22 N.m).

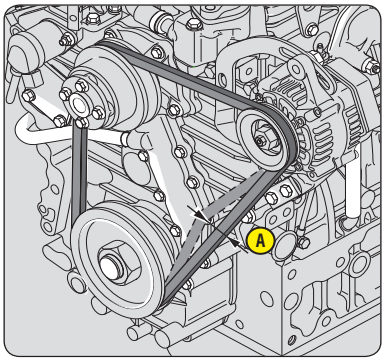

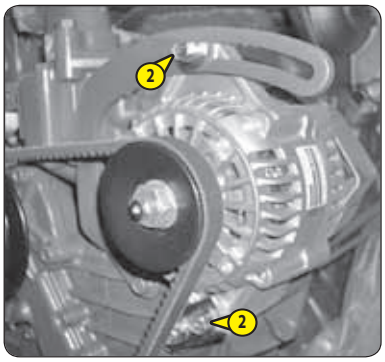

CHECK — Compressor belt tension (Air conditioning OPTION)

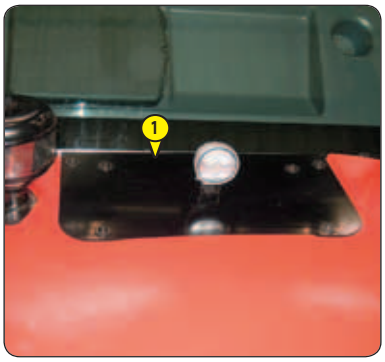

IMPORTANT

If the compressor belt has to be changed, check the tension again after the first 20 hours of operation.

- Open the engine cover (◁ COMMAND AND CONTROL INSTRUMENTS).
- Remove the access panel 1.
- Check the belt for signs of wear and cracks and change if necessary (◁ FILTER CARTRIDGES AND BELTS).
- Check the belt tension between the pulleys of the crankshaft and of the compressor.
- Using the MANITOU tension meter (Part No. 895692), measure the value 65 to 67 Hz.
- If required, adjust the belt.
- Loosen screw 1 by two to three turns.
- Loosen lock nut 2.
- Adjust the compressor using screw 3, so as to obtain the belt tension required.
- Retighten lock nut 2.
- Retighten the screws 1.

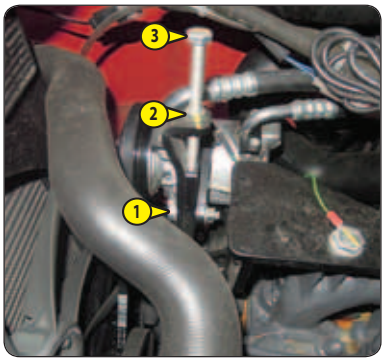

647690 (29/01/2019)
MC . . D K ST3A S1 / MSI . . D K ST3A S5

CHECK — Tyre pressures

CHECK — Wheel nut tightening

⚠ IMPORTANT ⚠

Check that the air hose is correctly connected to the tyre valve before inflating and keep all persons at a distance during inflation.

Inflate to the recommended tyre pressures.

- Check the wheel nut tightening. Non-compliance with this instruction can lead to deterioration and breakage of the wheel bolts and distortion of the wheels.
- Check and, if necessary, adjust the tyre pressures (◁ TYRES).

NOTE: There is an OPTIONAL wheel tool kit.

CHECK — Hydraulic oil level

Place the lift truck on level ground with the engine stopped, the mast tilted backward and lowered as far as possible.

⚠ IMPORTANT ⚠

Use a clean funnel and clean the underside of the oil drum before filling.

- Refer to the dipstick 1.
- The oil level is correct when it is at the level of the red point.
- Visually check that there is no leakage in the tank and pipes.
- If necessary, add oil (◁ LUBRICANTS AND FUEL).
- Open the engine cover (◁ COMMAND AND CONTROL INSTRUMENTS).
- Remove cap 2.
- Add oil through filler port 3.
- Visually check that there is no leakage in the tank and pipes.

NOTE: Always maintain the oil level at a maximum as cooling depends on the oil flowing through the tank.

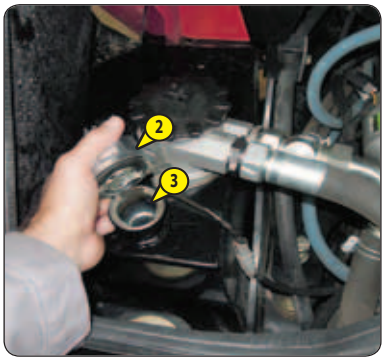

CHECK — Washer fluid level (option)

- Open the engine cover (◁ COMMAND AND CONTROL INSTRUMENTS).
- Visually check the level.
- If necessary, add windscreen washer liquid (◁ LUBRICANTS AND FUEL) through the filling hole 1.

647690 (29/01/2019)
MC . . D K ST3A S1 / MSI . . D K ST3A S5

CHECK - ADJUST — Tension and alignment of the mast lifting chains

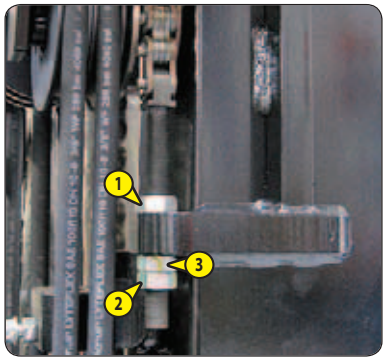

Place the lift truck on level ground with the mast vertical and the forks raised by approximately 200 mm.

⚠ IMPORTANT ⚠

These checks are important to ensure correct mast operation.

In case of technical faults, consult your dealer.

- Check the alignment of the mast lifting chains between the carriage chain fasteners and the chain rollers.
- Manually verify the chain tension and, if necessary, adjust it while ensuring that the carriage is perpendicular to the mast.
- Loosen nut 1.
- Loosen the chain tensioner lock nut 2.
- Adjust the tension by tightening or loosening the nut 3 while checking the alignment of the lifting chains.
- Then tighten lock nut 2 and nut 3.
- Retighten the nut 1.

CLEAN — Fuel pre-filter

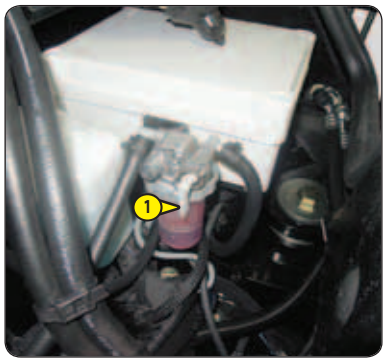

- Open the engine cover (◁ COMMAND AND CONTROL INSTRUMENTS).
- Switch off the lift truck's ignition.
- Open the engine cover (◁ COMMAND AND CONTROL INSTRUMENTS).
- Carefully clean the outside of the filter and its holder, to prevent dust from getting into the system.
- Close the filter tap 1 in the OFF position.
- Unscrew the retaining ring 2, remove the housing 3 and clean the inside using a brush immersed in clean diesel oil.
- Remove the filter cartridge 4 and immerse it in diesel oil to rinse it.
- Clean the inside of the filter head using a brush immersed in clean diesel oil.
- Refit the unit.
- Tighten the ring by hand pressure only and lock with a quarter turn
- Open the filter tap 1 in the ON position.
- Bleed the fuel supply circuit (◁ OCCASIONAL SERVICE).

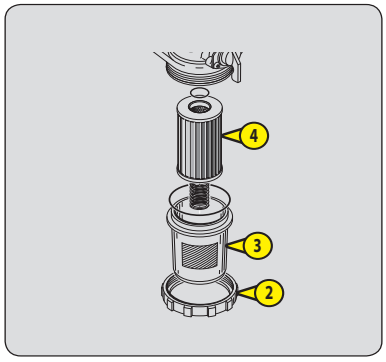

CLEAN — Radiator core

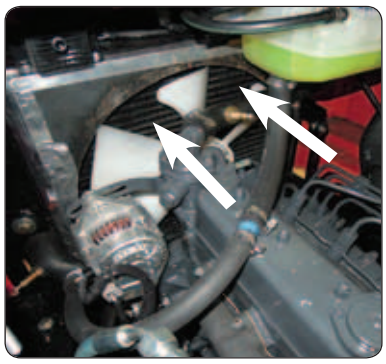

⚠ IMPORTANT ⚠

In a polluting atmosphere, clean the radiator cores every day.

Do not use a water jet or high pressure steam as this could damage the fins.

- Open the engine cover (◁ COMMAND AND CONTROL INSTRUMENTS).
- Using a soft cloth, clean the core in order to remove as much dirt as possible.
- Clean the radiator using a compressed air jet aimed from the engine towards the radiator, in the opposite direction to the cooling air flow.

647690 (29/01/2019)
MC . . D K ST3A S1 / MSI . . D K ST3A S5

CLEAN — Condenser harness (Air conditioning OPTION)

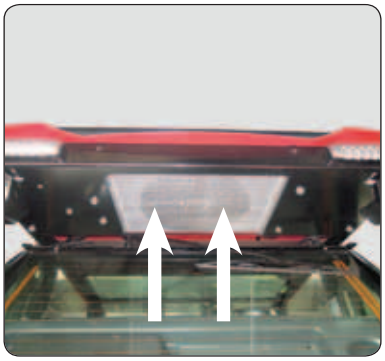

⚠ IMPORTANT ⚠

In a polluting atmosphere, clean the radiator core every day.

Do not use a high pressure cleaner or water jet in order to prevent damage to the condenser fins.

- Visually check whether the condenser is clean and clean it if necessary.
- Clean the condenser using a compressed air jet aimed in the same direction as the air flow.
- Clean with the fan running for best results.

CLEAN/CHECK — Dry air filter cartridge

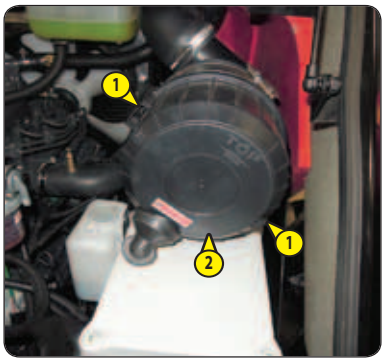

For very dusty atmospheres, there are pre-filtration elements (◁ FILTERS, CARTRIDGES AND BELTS).

In very dusty atmospheres, with pre-filtration, the cartridge replacement interval must be reduced to 250 hours.

⚠ IMPORTANT ⚠

If the clogging indicator light comes on, this operation should be performed as soon as possible (maximum 1 hour).

The cartridge must not undergo more than seven cleaning operations. Beyond seven it is essential to change the cartridge.

Never operate the lift truck with the air filter removed or damaged.

- Open the engine cover (◁ COMMAND AND CONTROL INSTRUMENTS).
- Release the locks 1 and remove the cover 2.
- Gently remove the cartridge 3 taking care to avoid spilling the dust.
- Leave the safety cartridge in place.
- Using a compressed air jet (max. 3 bar), clean the filter cartridge from the top to the bottom and from the inside towards the outside, maintaining a minimum safety distance of 30 mm to avoid damaging the cartridge. Cleaning is completed when there is no more dust escaping from the cartridge.

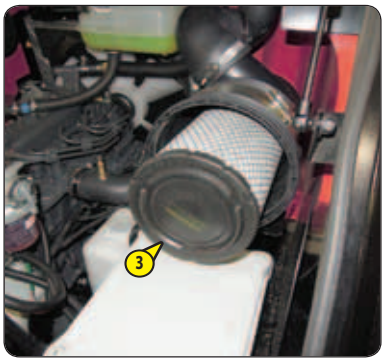

⚠ IMPORTANT ⚠

The cartridge must not be blown close to the air filter unit.

Never clean the cartridge by tapping it on a hard surface.

Never wash the dry air filter cartridge.

Never clean the air filter safety cartridge. Replace it with a new one if it is clogged or damaged.

- Clean the cartridge seal surfaces with a damp, clean lint-free cloth and grease with a silicone lubricant (MANITOU part no.: 479292).
- Check visually the outer condition of the air filter and its attachments.
- Also check the condition and attachment of the hoses.

647690 (29/01/2019)
MC . . D K ST3A S1 / MSI . . D K ST3A S5

LUBRICATE — General lubrication

To be carried out weekly, if the lift truck has been operated for less than 50 hours during the week.

⚠ IMPORTANT ⚠

In the event of prolonged use in an extremely dusty or oxidising atmosphere, reduce this interval to every 10 hours of service or every day.

- Clean, then lubricate the following points with grease (◁ LUBRICANTS AND FUEL) and remove the surplus.

REAR AXLE

MC . . -2 / MSI . .

- 1 - Swivel pin lubricators (2 lubricators).
- 2 - Lubricators for the lubricator tie-rods (4 lubricators).
- 3 - Lubricators of the oscillation axle (2 lubricators).

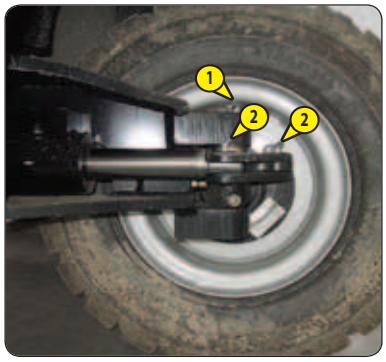

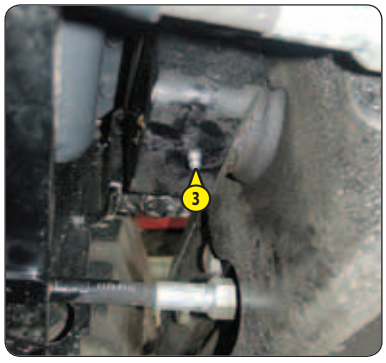

MC . . -4

- 4 - Wheel motor pivot lubricators (4 lubricators).
- 5 - Lubricators for the lubricator tie-rods (4 lubricators).
- 6 - Lubricators of the oscillation axle (2 lubricators).

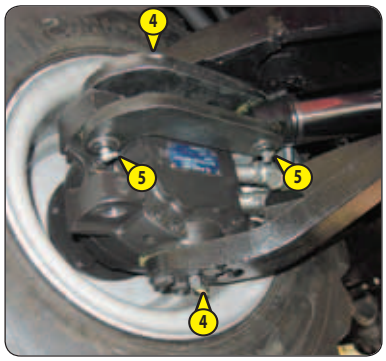

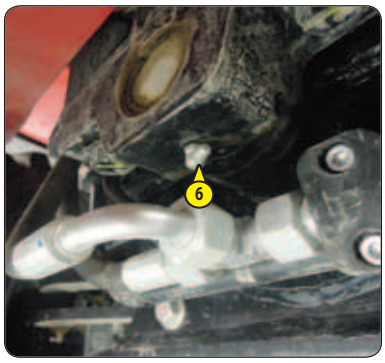

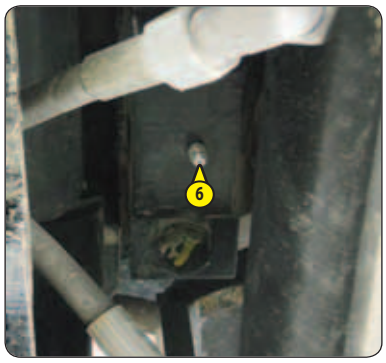

MAST

- 5 - Articulation axles at the foot of the mast (2 lubricators).
- 6 - Tilt cylinder foot axles (2 lubricators).
- 7 - Tilt cylinder head axles (2 lubricators).

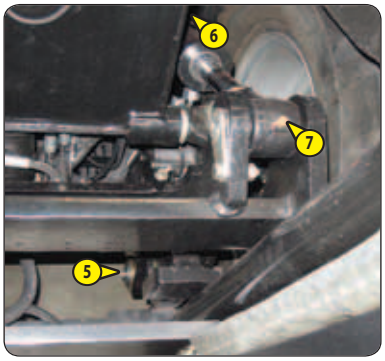

REPLACE *Engine oil ***

REPLACE *Engine oil filter ***

*** Only perform for the first 50 hours of service and then every 500 hours of service or 1 year.*

⚠ IMPORTANT ⚠

Dispose of the drain oil in an ecological manner.

- Place the lift truck on level ground, let the engine run at idle for a few minutes, then stop the engine.
- Open the engine cover (◁ COMMAND AND CONTROL INSTRUMENTS).
- Remove the access panel 1.
- Clean the areas around the plugs and oil filter.

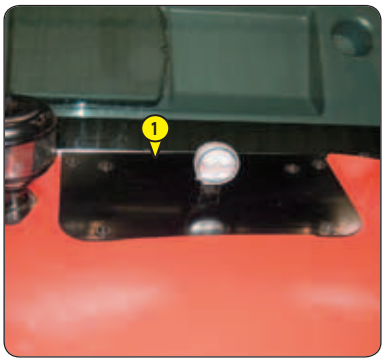

DRAINING THE OIL

- Place a container under drain port 2 and unscrew the plug.
- Remove the filler plug 3 to ensure that the oil is drained properly.

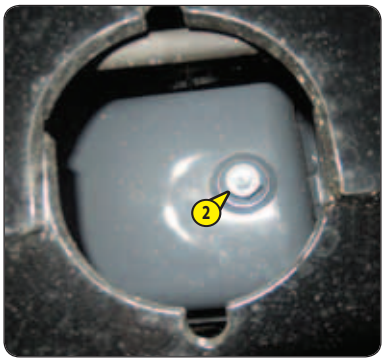

REPLACEMENT OF THE FILTER

- Unscrew and discard the engine oil filter 4, together with its seal.
- Clean the filter bracket with a clean, lint-free cloth.
- Lightly lubricate the seal before refitting the new oil filter (◁ FILTERING ELEMENTS AND BELTS) on its support (tightening torque 15 to 17 Nm).

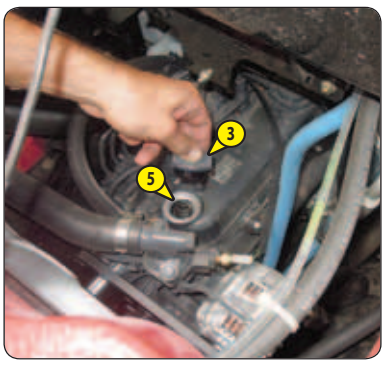

FILLING WITH OIL

- Refit and tighten the drain plug 2 (tightening torque 30 to 40 N.m).
- Fill up with oil (◁ LUBRICANTS AND FUEL) through filler port 5.
- Wait a few minutes to allow the oil to flow into the sump.
- Start the engine and let it run for a few minutes.
- Check for possible leaks from the drain plug and the oil filter.
- Stop the engine; wait a few minutes
- Check the correct level between the two notches on dipstick 6.
- Top up if necessary.

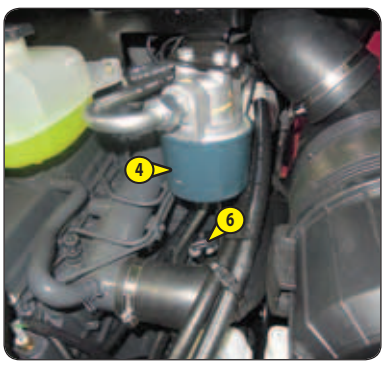

647690 (29/01/2019)
MC . . D K ST3A S1 / MSI . . D K ST3A S5

➲ ❶ 500 H - ROUTINE SERVICING - EVERY 500 HOURS OF SERVICE OR 1 YEAR

CHECK — Hydraulic oil

MANITOU offers a hydraulic oil analysis kit which makes it possible to extend the recommended interval for the periodic service (2,000 hours).

In this case, we recommend an analysis of the hydraulic oil every 500 hours of service.

This analysis kit makes it possible to confirm the oil quality to reach the deadline of 2,000 hours.

MANITOU oil analysis kit Part No. 958162.

- Order an oil analysis kit from your dealer.
- On receipt of the kit, take a sample and follow the detailed instructions.
- According to the results, keep the analysis report or replace the hydraulic oil.

NOTE: This kit is highly recommended for specific uses causing stresses on the hydraulic circuit:

- Extreme environmental conditions,
- Use of attachments with a very high hydraulic flow rate (sweepers, mixers, etc.).

GREASE — Mast lifting chains

- Wipe the mast lifting chains with a clean, lint-free cloth
- Vigorously brush the chains to get rid of any foreign matter, with a hard nylon brush and clean diesel fuel.
- Rinse the chains by means of a paint brush impregnated with clean diesel fuel and dry them with a compressed air jet.
- Carefully check each chain for any signs of wear.

⚠ IMPORTANT ⚠

In case of technical faults, consult your dealer.

- Grease the chains sparingly (◅ LUBRICANTS AND FUEL).

LUBRICATE — Cab door locks (option)

DISMANTLING LEFT-HAND DOOR CASING

- Remove the tip of the lever 1.
- Remove the protective casing 2 of each lock.

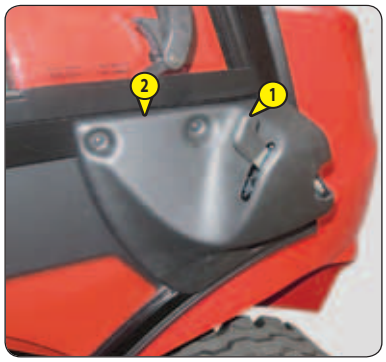

DISMANTLING RIGHT-HAND DOOR CASING

- Remove the tip of the lever 3.
- Unscrew the tip 4 of the opening control for the right-hand half-door
- Remove the protective casing 5 of each lock.

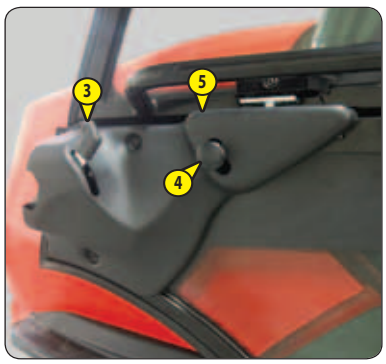

647690 (29/01/2019)
MC . . D K ST3A S1 / MSI . . D K ST3A S5

LUBRICATION OF THE LOCKS

- Clean and check the operation.
- Lubricate the mechanism 6.
- Refit the casings and the tips.

REPLACE *Engine oil*

REPLACE *Engine oil filter*

⚠ IMPORTANT ⚠

Dispose of the drain oil in an ecological manner.

- Place the lift truck on level ground, let the engine run at idle for a few minutes, then stop the engine.
- Open the engine cover (◁ COMMAND AND CONTROL INSTRUMENTS).
- Remove the access panel 1.
- Clean the areas around the plugs and oil filter.

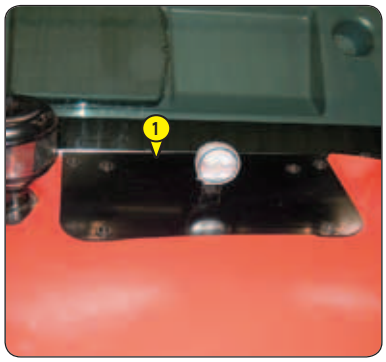

DRAINING THE OIL

- Place a container under drain port 2 and unscrew the plug.
- Remove the filler plug 3 to ensure that the oil is drained properly.

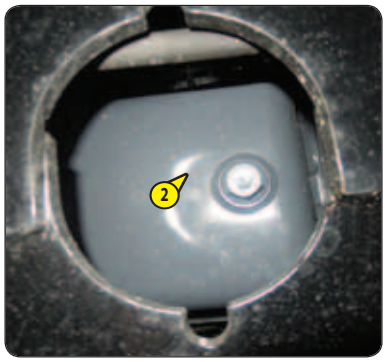

REPLACEMENT OF THE FILTER

- Unscrew and discard the engine oil filter 4, together with its seal.
- Clean the filter bracket with a clean, lint-free cloth.
- Lightly lubricate the seal before refitting the new oil filter (◁ FILTERING ELEMENTS AND BELTS) on its support (tightening torque 15 to 17 Nm).

FILLING WITH OIL

- Refit and tighten the drain plug 2 (tightening torque 30 to 40 N.m).
- Fill up with oil (◁ LUBRICANTS AND FUEL) through filler port 5.
- Wait a few minutes to allow the oil to flow into the sump.
- Start the engine and let it run for a few minutes.
- Check for possible leaks from the drain plug and the oil filter.
- Stop the engine; wait a few minutes
- Check the correct level between the two notches on dipstick 6.
- Top up if necessary.

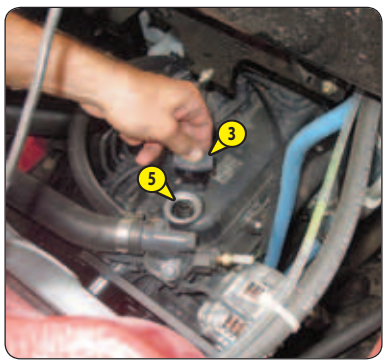

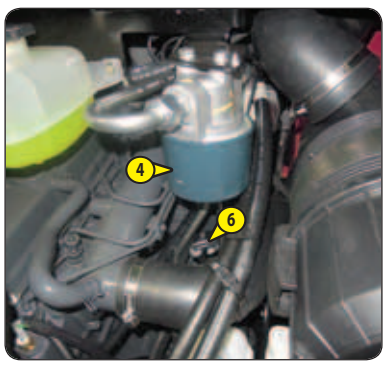

REPLACE Fuel filter

- Switch off the lift truck's ignition.
- Open the engine cover (◁ COMMAND AND CONTROL INSTRUMENTS).
- Carefully clean the outside of the filter and its holder, to prevent dust from getting into the system.
- Close the filter tap 1 in the OFF position.
- Unscrew the retaining ring 2, remove the housing 3 and clean the inside using a brush immersed in clean diesel oil.
- Remove and discard the filter cartridge 4.
- Clean the inside of the filter head using a brush immersed in clean diesel oil.
- Refit a filter and a new seal lubricated with clean diesel beforehand (◁ FILTER CARTRIDGES AND BELTS).
- Tighten the ring by hand pressure only and lock with a quarter turn
- Open the filter tap 1 in the ON position.

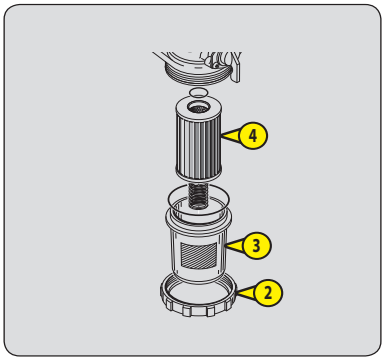

REPLACE Fuel pre-filter

After replacing the fuel filter, replace the fuel pre-filter.

- Carefully clean the outside of the filter and its holder, to prevent dust from getting into the system.
- Close the filter tap 1 in the OFF position.
- Unscrew the retaining ring 2, remove the housing 3 and clean the inside using a brush immersed in clean diesel oil.
- Remove and discard the filter cartridge 4.
- Clean the inside of the filter head using a brush immersed in clean diesel oil.
- Refit a filter and a new seal lubricated with clean diesel beforehand (◁ FILTER CARTRIDGES AND BELTS).
- Tighten the ring by hand pressure only and lock with a quarter turn
- Open the filter tap 1 in the ON position.
- Bleed the fuel supply circuit (◁ OCCASIONAL SERVICE).

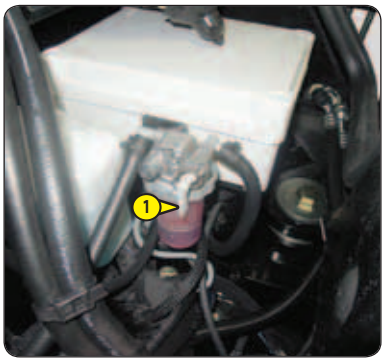

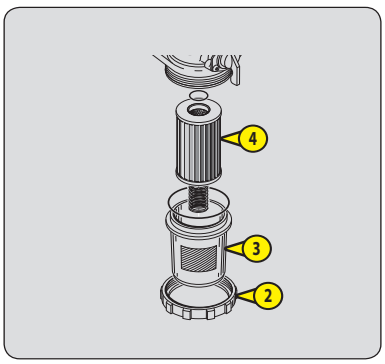

REPLACE — Hydraulic return oil filter cartridge

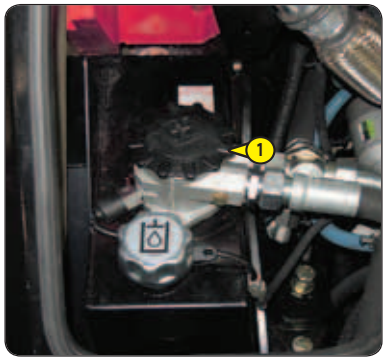

⚠ IMPORTANT ⚠

Do not operate the lift truck without the cartridge in place, as this would immediately damage the hydraulic transmission system, the pump and the hydrostatic wheel motors.

- Stop the engine on level ground.
- Release the pressure from the circuits by operating the hydraulic controls.
- Open the engine cover (◁ COMMAND AND CONTROL INSTRUMENTS).
- Carefully clean the outside of the filter and the area surrounding it
- Unscrew the plug 1 with a wrench.
- Remove the hydraulic oil filter cartridge 2 from the filter head 3 and replace it with a new one (◁ MAINTENANCE: FILTERING ELEMENTS AND BELTS).
- Refit the unit.
- Check the hydraulic oil level (◁ 50H - WEEKLY MAINTENANCE).

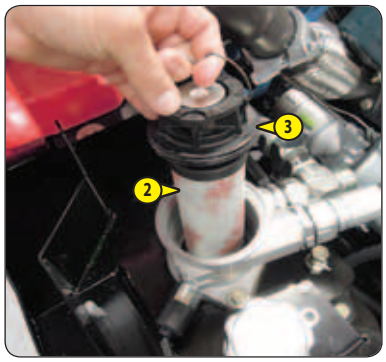

REPLACE — Cab fan filters (option)

EXTERNAL CAB VENTILATION FILTER

- Remove the floor mat.
- Lift out cab ventilation filter 1 and replace it with a new one (◁ FILTERS, CARTRIDGES AND BELTS).
- Put back the floor mat.

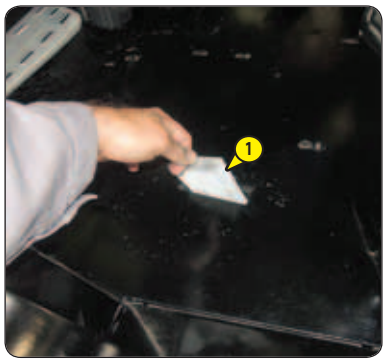

INTERNAL CAB VENTILATION FILTER

- Remove the protective grid 2.
- Take out cab ventilation filter 3 and replace it with a new one (◁ FILTER CARTRIDGES AND BELTS).
- Refit the protective grid.

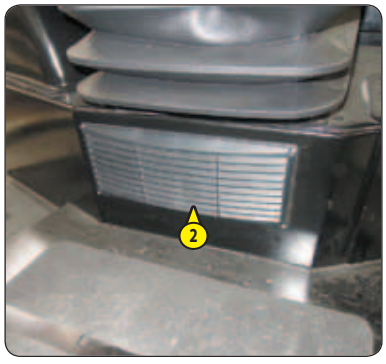

CHECK — Fork wear *

** Consult your dealer.*

➲ ❷ 1,000 H - ROUTINE SERVICING - EVERY 1,000 HOURS OF SERVICE OR 2 YEARS

ALSO PERFORM THE 500 HOUR PERIODIC MAINTENANCE OPERATIONS.

CHECK — Seat belt

⚠ IMPORTANT ⚠

If the seat belt is defective (fixing, locking, sewing, tears, etc.), the lift truck must not be used.

Immediately repair or replace the safety belt.

SEAT BELT WITH TWO ANCHORING POINTS

- Check the following points:
  - Fixing of the anchoring points on the seat.
  - Cleanness of the strap and the locking mechanism.
  - Triggering of the locking mechanism.
  - Condition of the strap (cuts, curled edges).

REELED SEAT BELT WITH TWO ANCHORING POINTS

- Check the points listed above together with the following points:
  - The correct winding of the belt.
  - Condition of the reel guards.
  - Roller locking mechanism when the strap is given a sharp tug.

CLEAN — Fuel tank

⚠ IMPORTANT ⚠

While carrying out these operations, do not smoke or work near a flame.

Never try to carry out a weld or any other operation by yourself, this could provoke an explosion or a fire.

- Place the lift truck on level ground with the engine stopped.
- Check for any possible leaks in the fuel circuit and tank.
- In the event of a leak, never carry out any welding or other operation yourself; contact your dealer.
- Place a container under drain plug 1 and unscrew the plug.
- Remove the filler plug 2 to ensure that the oil is drained properly.
- Rinse out with ten litres of clean diesel through filler port 3.
- Refit and tighten the drain plug 1 (tightening torque 29 to 39 N.m).
- Fill the fuel tank with clean, filtered diesel.
- If necessary, bleed the fuel supply system (◁ OCCASIONAL SERVICE).

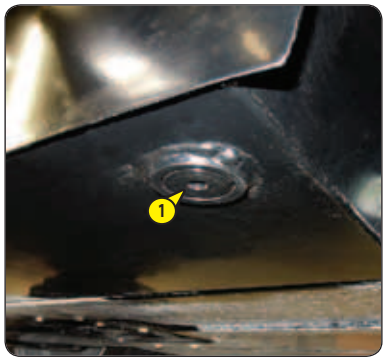

647690 (29/01/2019)
MC . . D K ST3A S1 / MSI . . D K ST3A S5

REPLACE — Coolant

These operations are to be carried out as necessary or every two years at the beginning of winter.

⚠ IMPORTANT ⚠

The engine does not contain any corrosion resistor and must be filled during the whole year with a mixture containing 25 % of ethylene glycol-based antifreeze.

- Place the lift truck on level ground with the engine stopped and cold.
- Open the engine cover (◁ COMMAND AND CONTROL INSTRUMENTS).
- Remove the access panel 1.

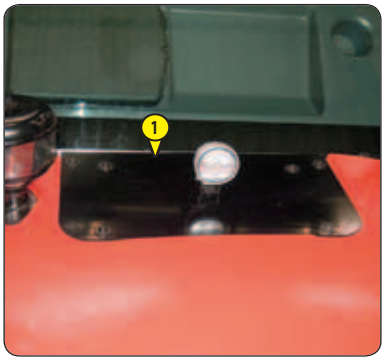

DRAINING THE LIQUID

- Open the tap 2 to ensure good drainage.
- Place a container under hose 3.
- Undo the clamp 4 and remove the hose.
- Remove the filler plug 5 to ensure that the oil is drained properly.
- Let the cooling circuit drain entirely while ensuring that the ports do not get clogged.
- Check the condition of the hoses and their attachments, and change if necessary.
- Rinse the circuit with clean water, or use a cleaning agent if necessary.

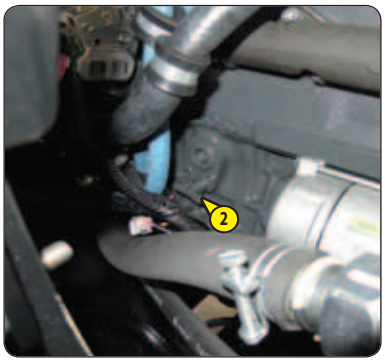

FILLING WITH COOLANT

- Refit the hose 4 with its clamp 5.
- Close tap 3 again.
- Slowly fill the circuit with the coolant (◁ LUBRICANTS AND FUEL) through the filling hole 6.
- Refit the filler plug 2.
- Run the engine at idle for a few minutes.
- Visually check that there is no leakage in the radiator and pipes.
- Check the level and refill if necessary.

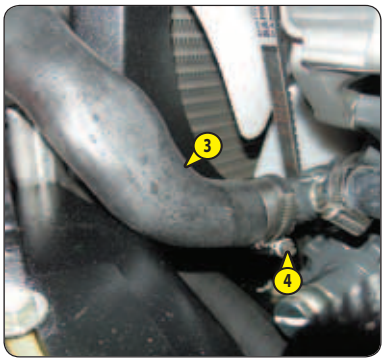

647690 (29/01/2019)
MC . . D K ST3A S1 / MSI . . D K ST3A S5

REPLACE — Dry air filter cartridge

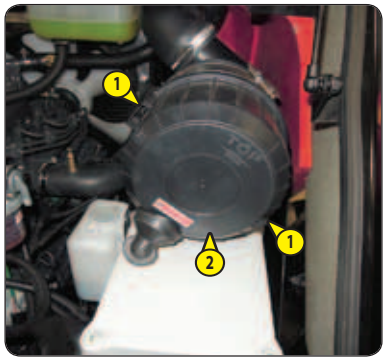

For very dusty atmospheres, there are pre-filtration elements (◁ FILTERS, CARTRIDGES AND BELTS).

In very dusty atmospheres, with pre-filtration, the cartridge replacement interval must be reduced to 250 hours.

⚠ IMPORTANT ⚠

Change the cartridge in a clean location, with the engine stopped.

Never operate the lift truck with the air filter removed or damaged.

- Open the engine cover (◁ COMMAND AND CONTROL INSTRUMENTS).
- Release the locks 1 and remove the cover 2.
- Gently remove the cartridge 3 taking care to avoid spilling the dust.
- Leave the safety cartridge in place.
- Carefully clean the following parts with a clean, damp, lint-free cloth:
  - The inside of the filter and its cover and the inlet hose.
  - The gasket surfaces of the filter and the cover.
- Check the condition and attachment of the hoses between the air filter and the engine
- Check the condition and connection of the clogging indicator on the filter.
- Check the condition of the new filter cartridge (◁ FILTERS AND BELTS).
- Introduce the cartridge into the filter axis, pressing on the edges and not the middle.
- Reassemble the cover, guiding the valve downwards.

CHECK — Engine silent blocks *

CHECK — Engine speeds *

CHECK — Engine valve clearances *

CHECK — Condition of wheels and tyres *

REPLACE — Hydraulic oil tank suction strainer *

CHECK — Speeds of hydraulic movements *

CHECK — Condition of hoses and flexible pipes *

CHECK — Condition of cylinders (leakage, rods) *

CHECK — Condition of wiring harnesses and cables *

CHECK — Lights and signals (option) *

CHECK — Warning indicators *

647690 (29/01/2019)
MC . . D K ST3A S1 / MSI . . D K ST3A S5

CHECK	Condition of the rear view mirrors *
CHECK	Cabin structure *
CHECK	Frame structure *
CHECK	Attachment carriage *
CHECK	Condition of attachments *

* Consult your dealer.

647690 (29/01/2019)
MC . . D K ST3A S1 / MSI . . D K ST3A S5

➲ ❸ 2,000 H - ROUTINE SERVICING - EVERY 2,000 HOURS OF SERVICE OR 4 YEARS

ALSO PERFORM THE 500 HOUR AND 1,000 HOUR PERIODIC SERVICE OPERATIONS.

CHECK — Wheel nut tightening torques

- Check the condition of the tyres, to detect cuts, blisters, wear, etc.
- Check the tightening torque of the wheel nuts with a torque wrench.
  - Front wheels: 550 N.m ± 55 N.m
  - Rear wheels: 110 Nm ± 16 Nm MC..-2 / MSI..
  - Rear wheels: 200 Nm ± 20 Nm MC..-4

REPLACE — Dry air filter safety cartridge

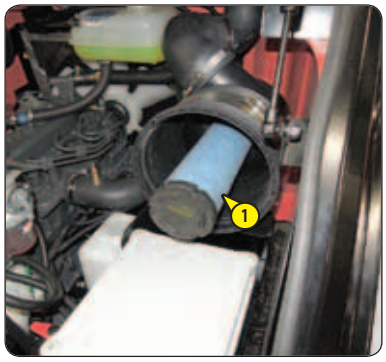

⚠ IMPORTANT ⚠

The frequency of changing the safety cartridge is given as an example.

It must be changed every second time the dry air filter cartridge is changed.

- For dismantling the dry air filter cartridge (◅ 1,000 H - PERIODIC SERVICE).
- Remove the dry air filter safety cartridge 1 carefully, to minimise dust fall.
- Clean the gasket surface of the safety cartridge with a clean, damp, lint-free cloth.
- Check the condition of the new safety cartridge (◅ FILTERS AND BELTS).
- Introduce the safety cartridge into the filter axis, pressing on the edges and not the middle.
- For refitting the dry air filter cartridge (◅ 1,000 H - PERIODIC SERVICE).

REPLACE — Hydraulic oil

REPLACE — Hydraulic oil tank filter cap

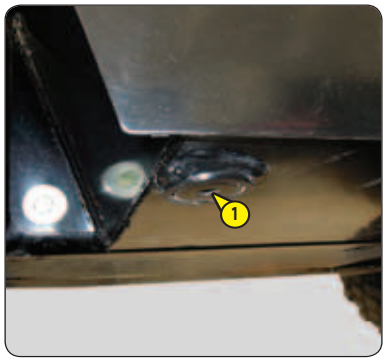

⚠ IMPORTANT ⚠

Dispose of the drain oil in an ecological manner.

Thoroughly clean the area surrounding the drain plug and the hydraulic tank access hatch.

- Place the lift truck on level ground with the engine stopped, the mast tilted backward and lowered as far as possible.
- Open the engine cover (◅ COMMAND AND CONTROL INSTRUMENTS).

DRAINING THE OIL

- Place a container under drain plug 1 and unscrew the plug.
- Remove level and filling plug 2 to ensure that the oil is drained properly and discard.

FILLING UP THE OIL

- Clean and refit the drain plug 1 (tightening torque 29 to 39 N.m).
- Fill up with oil (◅ LUBRICANTS AND FUEL) through filler port 3.
- Check the oil level on the dipstick 4, the oil level should be level with the red point.
- Check for any possible leaks at the drain plug.

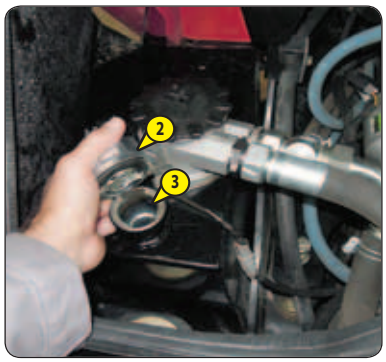

FILTER PLUG REPLACEMENT

- Replace filler plug with a new filler plug 2 (◅ FILTERS CARTRIDGES AND BELTS).

647690 (29/01/2019)
MC..D K ST3A S1 / MSI..D K ST3A S5

HYDRAULIC CIRCUIT DECONTAMINATION

- Let the engine run (accelerator pedal at mid position) for 5 minutes without using any accessories on the lift truck, then for 5 more minutes while using all the hydraulic movements (except the steering system and the service brakes).
- Accelerate the engine at full speed for 1 minute, then activate the steering system and the service brakes.
- This operation allows the circuit to be decontaminated by the hydraulic oil filter.

⚠ IMPORTANT ⚠

It is sometimes necessary to bleed the circuits at the pump inlet when an air bubble forms during draining.

Then consult your dealer.

CHECK	Injection pump *
CHECK	Injectors *
CHECK	Radiator *
CHECK	Water pump and thermostat *
CHECK	Alternator and starter *
CHECK	Hydrostatic transmission circuit pressures *
CHECK	Hydrostatic transmission control flow *
CHECK	Hydrostatic transmission / accelerator cut-off operation *
CHECK	Steering *
CHECK	Kingpins (MC 18-2)
CHECK	Wheel motor pivots (MC 18-4)
CHECK	Rear axle *
CHECK	Disc brake wear on wheel motors *
CHECK	Condition of boom assembly *
CHECK	Mast lifting chains *
CHECK	Mast lifting chain pulleys *
CHECK	Mast guide rollers *
CHECK	Mast bearing rollers *
CHECK	Thickness of the mast wearing plates *

647690 (29/01/2019)
MC . . D K ST3A S1 / MSI . . D K ST3A S5

CHECK — Hydraulic circuit pressures *

CHECK — Hydraulic circuit flow rates *

CHECK — Bearings and bushings *

CLEAN — Air conditioning (OPTION) *

CLEANING CONDENSER AND EVAPORATOR COILS

CLEANING CONDENSATE TRAY AND RELIEF VALVE

COLLECTING COOLANT TO REPLACE DRIER FILTER

REFILLING WITH COOLANT AND CHECKING THE THERMOSTATIC CONTROL AND PRESSURE SWITCHES

NOTE: When opening the evaporator unit, remember to replace the cover seal.

⚠ IMPORTANT ⚠

DO NOT ATTEMPT TO REPAIR ANY PROBLEMS YOURSELF. ALWAYS REFER TO YOUR DEALER WHEN REFILLING CIRCUITS, AS THEY HOLD THE CORRECT SPARE PARTS, AS WELL AS HAVING THE NECESSARY TECHNICAL KNOWLEDGE AND TOOLS.

In any of the following circumstances, call a doctor.

If inhaled, take the victim to fresh air.

If there is contact with the skin, wash immediately with plenty of water .

If there is frostbite, apply a sterile dressing.

If there is contact with the eyes, rinse with clear water for 15 minutes.

IMPORTANT INFORMATION REGARDING THE COOLANT USED

- This product contains fluorinated greenhouse gases covered by the Kyoto Protocol.
- Coolant type: R134A; it is colourless and odourless and heavier than air. Its GWP (Global Warming Potential) is 1430.
- Do not allow the gas to escape into the atmosphere. Do not open the circuit under any circumstances, as this could cause coolant to escape.

- The compressor has a fluid level gauge; never unscrew this gauge because it would depressurise the system. The fluid level should only be checked when draining the system.

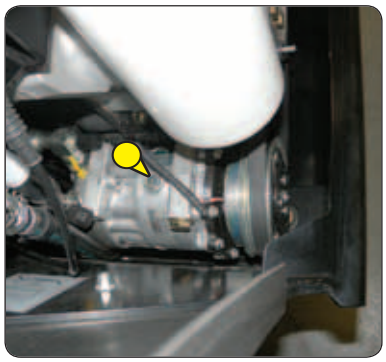

CLEAN/CHECK — Hydraulic oil tank and strainer *

** Consult your dealer.*

647690 (29/01/2019)
MC . . D K ST3A S1 / MSI . . D K ST3A S5

OCCASIONAL SERVICE

CLEAN — Engine compartment

CLEAN — Inside of the frame

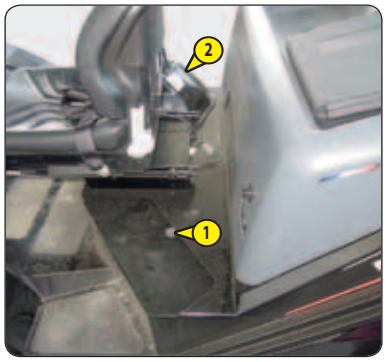

IMPORTANT

Do not use a high pressure cleaner or water jet.

Take precautions with electrical and electronic components.

- Open the engine cover (◁ COMMAND AND CONTROL INSTRUMENTS).
- Open the battery access flap 1.
- Remove the protection for the hydraulic controls 2.
- Clean the engine compartment and the inside of the frame using a compressed air jet.

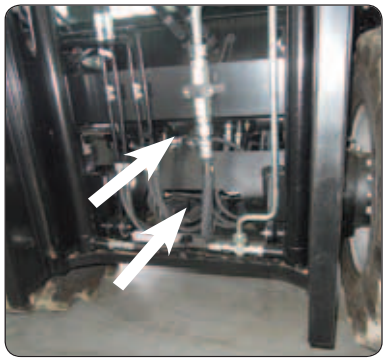

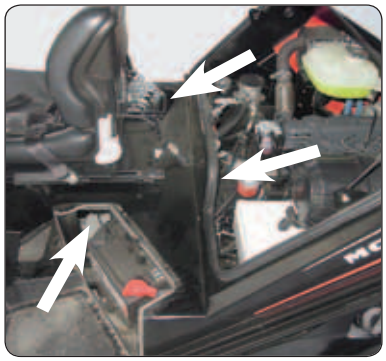

REPLACE — Wheels

IMPORTANT

In the event of a wheel being changed on the public highway, secure the lift truck vicinity:

- Stop the lift truck, if possible on firm, level ground.
- Shut down the lift truck (◁ OPERATING INSTRUCTIONS UNLADEN AND LADEN).
- Switch on the hazard warning lights (Option).
- Immobilise the lift truck in both directions on the axle opposite to the wheel to be changed.
- Unlock the nuts of the wheel to be changed.

REAR WHEEL

For this operation, we advise you to use the hydraulic jack MANITOU Part number 505507.

- Place the jack under the counterweight. It must be situated in the middle and under the flat part of the counterweight.
- Lift the wheel until it comes off the ground and put in place the safety block under the axle.
- Completely unscrew the wheel nuts and remove them.
- Free the wheel by reciprocating movements and roll it to the side.
- Slip the new wheel on the wheel hub.
- Hand-tighten the nuts, grease them if necessary.
- Remove the security block and lower the lift truck with the jack.
- Tighten the wheel nuts with a torque wrench (◁ 2,000 H - PERIODIC SERVICE) for tightening torque.

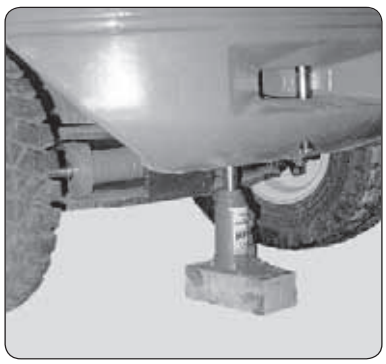

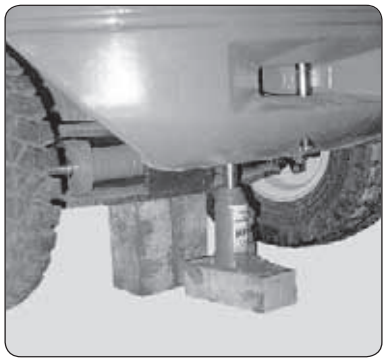

647690 (29/01/2019)
MC . . D K ST3A S1 / MSI . . D K ST3A S5

FRONT WHEEL

- Lift the carriage and tilt the mast backwards.
- Immobilise under the foot of the mast on the side where the wheel is being changed.
- Tilt the mast forwards to lift the wheel.
- Place wedges under the chassis as near as possible to the wheel.
- Completely unscrew the wheel nuts and remove them.
- Free the wheel by reciprocating movements and roll it to the side.
- Slip the new wheel on the wheel hub.
- Hand-tighten the nuts, grease them if necessary.
- Remove the wedges under the axle and lower the lift truck.
- Tighten the wheel nuts with a torque wrench (◁ 2,000 H - PERIODIC SERVICE) for tightening torque.

REPLACE — *Battery*

⚠ IMPORTANT ⚠

Handling and servicing a battery can be dangerous, take the following precautions:

- Wear protective goggles.

- Keep the battery horizontal.

- Never smoke or work near a naked flame.

- Work in a well-ventilated area.

- In the event of electrolyte being spilled onto the skin or splashed in the eyes, rinse thoroughly with cold water for 15 minutes and call a doctor.

- Open the battery access flap 1.
- Unscrew the battery fastener 2.
- Disconnect terminal 3 (+) then terminal 4 (-).
- Replace the battery.

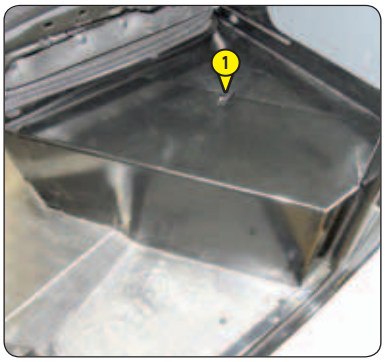

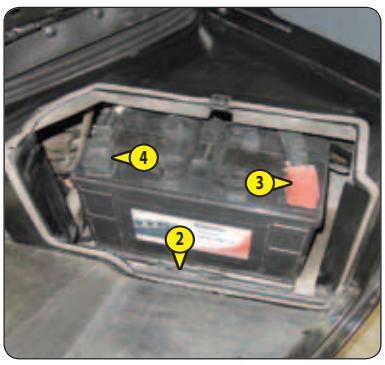

647690 (29/01/2019)
MC . . D K ST3A S1 / MSI . . D K ST3A S5

BLEED — Fuel supply circuit

These operations are to be carried out only in the following cases:

- A component of the fuel system replaced or drained.
- A drained tank.
- Running out of fuel.

- Ensure that the fuel level in the tank is sufficient and bleed in the following order:
- Open the engine cover (◁ COMMAND AND CONTROL INSTRUMENTS).
- Remove the access panel 1.

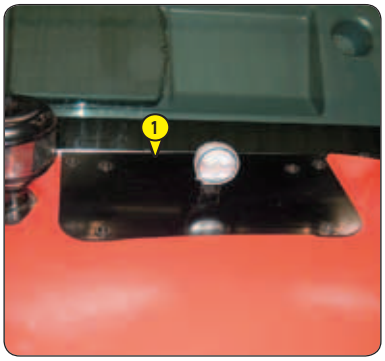

BLEEDING THE FUEL FILTER

- Unscrew bleeder screw 2.
- Switch on the lift truck ignition until the diesel fuel flows from the bleeder screw free of any air.
- Tighten the bleed screw while the diesel fuel is flowing out.

BLEEDING THE INJECTION PUMP

- Open bleed screw 3.
- Switch on the lift truck ignition until the diesel fuel flows from the bleeder screw free of any air.
- Hermetically close the bleed valve while the diesel fuel is flowing.

The engine is now ready to be started.

NOTE: If the engine runs correctly for a short time then stops or runs erratically, check for possible leaks in the low pressure circuit. If in doubt, contact your dealer.

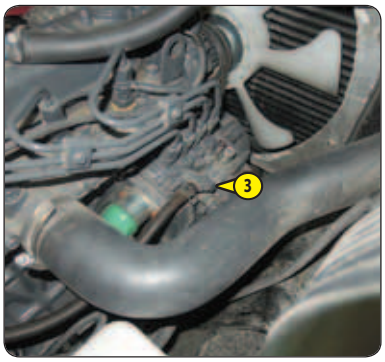

ADJUST — Front headlights

RECOMMENDED SETTING

(As per standard ECE-76/756 76/761 ECE20)

Adjustment of -2 % of the dipped beam harness relative to the horizontal axis of the headlight.

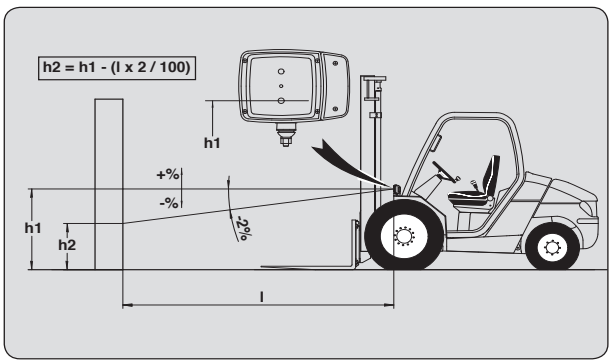

ADJUSTMENT PROCEDURE

- Place the unladen lift truck in the transport position and perpendicular to a white wall on flat, level ground.
- Check the tyre pressures (◁ TYRES).
- Place the forward/reverse selector in neutral.

CALCULATING THE HEIGHT OF THE DIPPED BEAM (H2)

- h1 = Height of the dipped beam in relation to the ground.
- h2 = Height of the adjusted beam.
- l = Distance between the dipped beam and the white wall.

647690 (29/01/2019)
MC . . D K ST3A S1 / MSI . . D K ST3A S5

➲ OCCASIONAL OPERATION

TOW — Lift truck

If the lift truck is on a slope, with parking brake applied, chock it so that it does not descend the slope.

⚠ IMPORTANT ⚠

The lift truck must be towed very slowly (less than 5 km/h) and for as short a distance as possible (less than 100 m).

Use a rigid drawbar, as the lift truck is disconnected from its brake system.

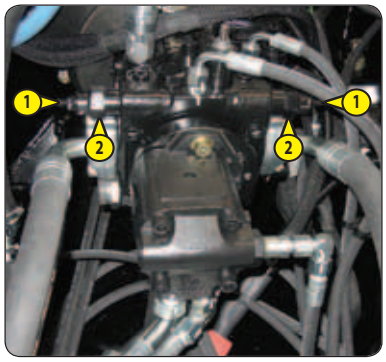

UNLOCKING THE HYDROSTATIC TRANSMISSION

NOTE: When towing the lift truck, the high pressure limiters 1 must be unlocked to avoid damaging the hydrostatic transmission.

- Open the engine cover (◁ COMMAND AND CONTROL INSTRUMENTS).
- Unscrew the nuts 2 by two turns at the most.

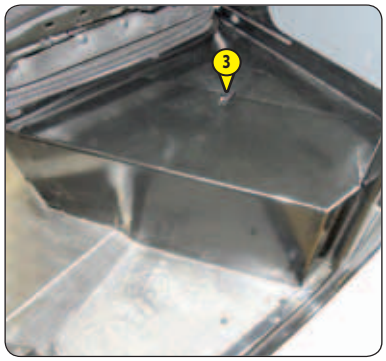

UNLOCKING THE FRONT WHEEL BRAKES

- Open the battery access flap 3.
- Press the button 4.
- Pump (minimum of 20 times) using the button 5 to release the front wheel brakes.

TOWING THE LIFT TRUCK

- Switch on the hazard warning lights (Option).
- Tow the lift truck gently and carefully.

Steering hydraulic assistance fails:

- Use the steering wheel slowly but powerfully.
- Avoid sudden or jerky movements.

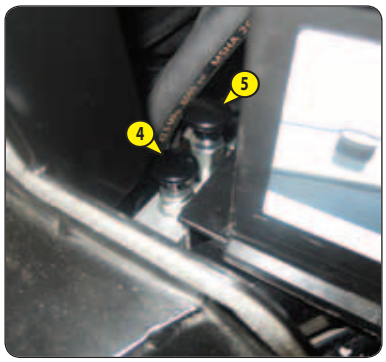

AFTER TOWING THE LIFT TRUCK

- Proceed in the reverse order to lock the high pressure limiters.
- Pull button 4 to reactivate braking.

647690 (29/01/2019)
MC . . D K ST3A S1 / MSI . . D K ST3A S5

SLING — Lift truck

- Take into account the position of the lift truck centre of gravity for lifting.

A = 1148 mm	B = 752 mm	MC 25-2 D K ST3A S1
A = 1158 mm	B = 742 mm	MC 25-4 D K ST3A S1
A = 1176 mm	B = 724 mm	MC 30-2 D K ST3A S1
A = 1134 mm	B = 766 mm	MC 30-4 D K ST3A S1
A = 1148 mm	B = 752 mm	MSI 25 D K ST3A S5
A = 1176 mm	B = 724 mm	MSI 30 D K ST3A S5
A = 1213 mm	B = 687 mm	MSI 35 D K ST3A S5

- Place the hooks in the fastening points 1 provided.

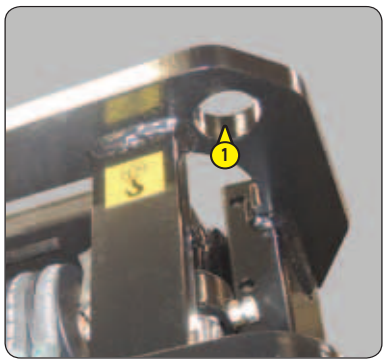

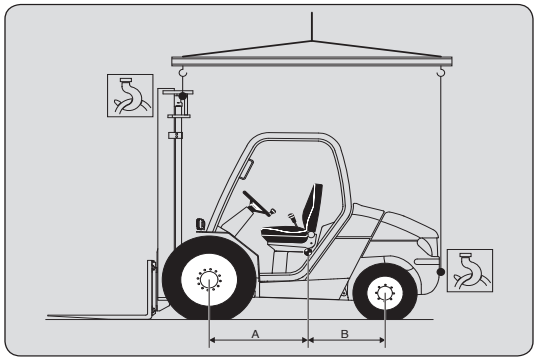

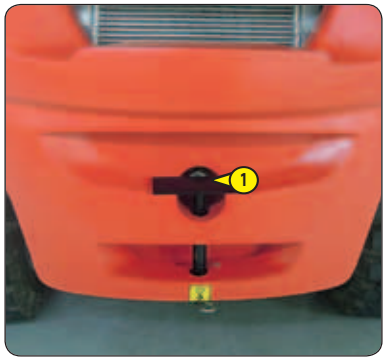

TRANSPORT — Lift truck

⚠ IMPORTANT ⚠

Check that the safety instructions relating to the flatbed have been correctly applied before loading the lift truck and that the driver of the transporter is informed about the dimensions and the weight of the lift truck (◁ CHARACTERISTICS).

Ensure that the platform is of sufficient size and load capacity for transporting the lift truck.

Check also the allowable ground contact pressure of the platform relative to the lift truck.

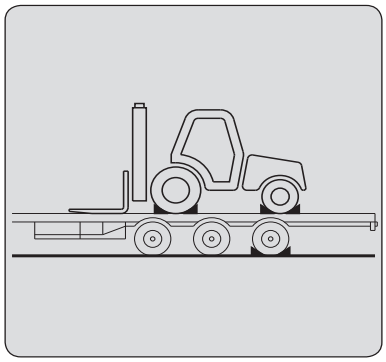

LOADING THE LIFT TRUCK

- Block the wheels of the platform.
- Attach the loading ramps to the platform in such a way as to give the shallowest possible ramp angle for the lift truck.
- Load the lift truck parallel to the platform.
- Stop the lift truck (◁ OPERATING INSTRUCTIONS UNLADEN AND LADEN).

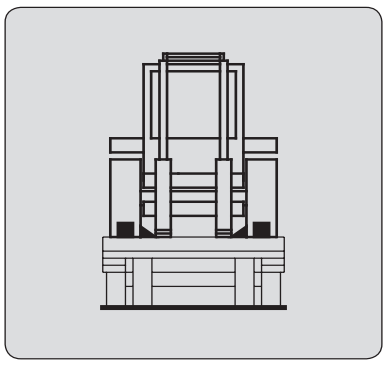

STOWING THE LIFT TRUCK

- Fix the chocks to the platform at the front and at the back of each tyre.
- Also fix the chocks to the platform on the inside of each tyre.
- Secure the lift truck to the platform with sufficiently strong ropes:
  - At the front, to the anchoring points 1
  - At the rear, to the slinging and anchoring pin 2.
- Tighten the ropes.

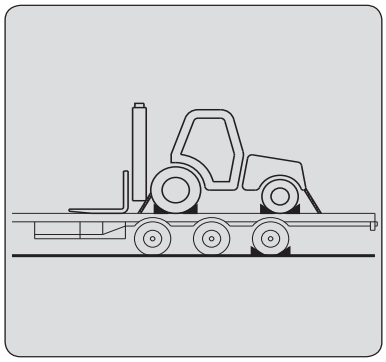

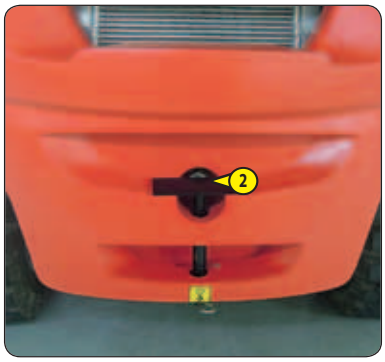

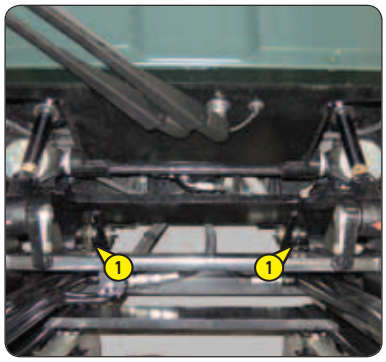

4-OPTIONAL ADAPTABLE ATTACHMENTS FOR THE RANGE

647690 (29/01/2019)
MC..DKST3AS1/MSI..DKST3AS5

TABLE OF CONTENTS

4 - OPTIONAL ADAPTABLE ATTACHMENTS FOR THE RANGE

INTRODUCTION 5

TECHNICAL SPECIFICATIONS OF ATTACHMENTS 6

ATTACHMENT SHIELDS 7

647690 (29/01/2019)
MC.. DK ST3A S1 / MSI.. DK ST3A S5

INTRODUCTION

Your lift truck must be used with interchangeable equipment. These items are called: ATTACHMENTS.

A wide range of attachments is available, guaranteed by MANITOU and designed to fit your lift truck perfectly.

⚠ IMPORTANT ⚠

Only attachments approved by MANITOU are to be used on our lift trucks
(see: 4 - ADAPTABLE ATTACHMENTS IN OPTION ON THE RANGE: TECHNICAL SPECIFICATIONS OF ATTACHMENTS).
The manufacturer shall not be liable for any modification or adaptation of an attachment made without its knowledge.

The attachments are delivered with a load chart concerning your lift truck. The operator's manual and the load chart should be kept in the places provided in the lift truck. For standard attachments, their use is governed by the instructions contained on this notice.

⚠ IMPORTANT ⚠

Maximum loads are defined by the capacity of a lift truck taking account of the attachment's mass and center of gravity.
In the event of the attachment having less capacity than the lift truck, never exceed this limit.

All attachments with a suspended load (winch, crane jib, crane jib with winch, hook, etc.) MUST be used with a lift truck equipped with a hydraulic movement cut-out device. In this case, the movement cut-out must be switched on and the transverse attitude perfectly horizontal.

Some particular uses require the adaptation of the attachment which is not provided in the price-listed options. Optional solutions exist, consult your dealer.

647690 (29/01/2019)
MC..D K ST3A S1 / MSI..D K ST3A S5

TECHNICAL SPECIFICATIONS OF ATTACHMENTS

*: Double mast with all-round vision (DVT)

**: Double mast with free-acting lift (DLL)

***: Triple mast with free-acting lift (TLL)

STANDARDISED SIDE-SHIFT CARRIAGE

	-	
PART NO.	-	
Rated capacity	kg	
Side-shift	- mm	
Width	mm	
Ground	kg	

STANDARDIZED FORK

MC 25 - 2 D K ST3A S1 / MC 25 - 4 D K ST3A S1 / MSI 25 D K ST3A S5

PART NO.	**52585528**	**52596822**	**52585529**
Section	100 x 40 x 1100 mm	122 x 40 x 1150 mm	100 x 40 x 1200 mm
Ground	kg	kg	kg
PART NO.	**52585530**	**52585531**	
Section	100 x 40 x 1500 mm	125 x 45 x 1200 mm	
Ground	kg	kg	

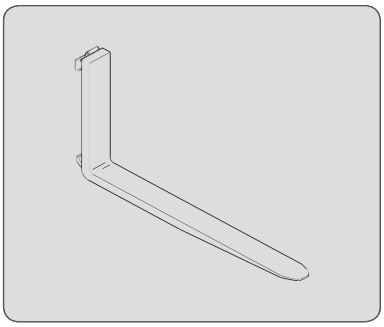

STANDARDIZED FORK

MC 30 - 2 D K ST3A S1 / MC 30 - 4 D K ST3A S1 / MSI 30 D K ST3A S5

PART NO.	**52585536**	**52596827**	**52585538**
Section	100 x 45 x 1100 mm	122 x 45 x 1150 mm	100 x 45 x 1200 mm
Ground	kg	kg	kg
PART NO.	**52585540**	**52585534**	
Section	100 x 45 x 1500 mm	150 x 50 x 1200 mm	
Ground	kg	kg	

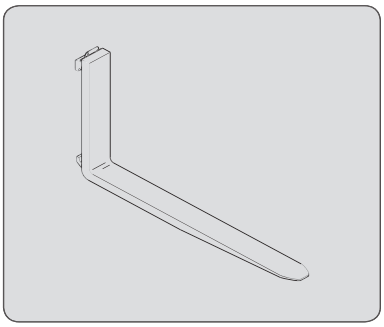

STANDARDIZED FORK

MSI 35 D K ST3A S5

PART NO.	**52585534**	**52585535**	**52596829**
Section	150 x 50 x 1200 mm	125 x 45 x 1100 mm	122 x 50 x 1150 mm
Ground	kg	kg	kg
PART NO.	**52585537**	**52585539**	
Section	125 x 45 x 1200 mm	125 x 45 x 1500 mm	
Ground	kg	kg	

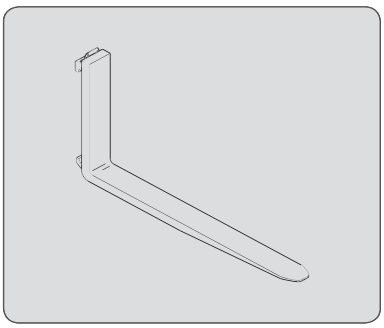

647690 (29/01/2019)
MC . . D K ST3A S1 / MSI . . D K ST3A S5

ATTACHMENT SHIELDS

FORK PROTECTOR
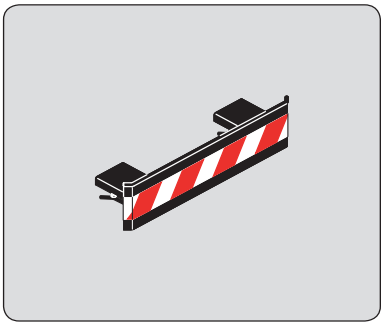
PART NO. 227801