1800 kg

TECHNICAL SPECS

SPECIFICATIONS	1.1	Manufacturer			**MANITOU**
	1.2	Model			**MC 18-4**
	1.3	Power source			Diesel
	1.4	Driving position			Seated
	1.5	Nominal capacity	Q	kg	1800
	1.6	Load- centre of gravity	c	mm	500
	1.8	Distance from the load-bearing surface to centre of front axle	x	mm	616
	1.9	wheelbase	y	mm	1900
WEIGHTS	2.1	Operating weight		kg	3562
	2.2	Axle load, with load, front / rear		kg	4692 / 670
	2.3	Axle load, without load, front / rear		kg	1662 / 1900
TYRES	3.1	Tyre equipment: cushion (V), superelastic (SE), pneumatic (L) L			L
	3.2	Size of front wheels			12,5/80-18/12 SL R4
	3.3	Size of rear wheels			27x10-12 SKS
	3.5	Number of front wheels (x = drive wheel) / rear wheels			2x / 2x
	3.6	Front wheel gauge (middle of wheels)	b10	mm	1159
	3.7	Rear wheel gauge (middle of wheels)	b11	mm	1176
DIMENSIONS	4.1	Tilt of mast forwards / backwards (1)	α / β	deg	10 / 12
	4.2	Height mast lowered	h1	mm	2190
	4.3	Free lift	h2	mm	90
	4.4	Lift height	h3	mm	4300
	4.5	Height mast extended	h4	mm	5114
	4.7	Height of overhead guard (cabin / buggy version / cabin w/air conditionning)	h6	mm	2145 / 1990 / 1990
	4.8	Height of seat	h7	mm	1094
	4.19	Overall lenght	l1	mm	4050
	4.20	Lenght at fork heels	l2	mm	2950
	4.21	Total width (overall)	b1	mm	1450
	4.22	Fork dimensions	s / e / l	mm	35 / 100 / 1100
	4.23	Fork carriage to DIN 15173 A/B FEM4A			FEM 2A
	4.24	Width of fork carriage	b3	mm	1260
	4.31	Ground clearance below mast	m1	mm	300
	4.32	Ground clearance at centre of wheel-base	m2	mm	310
	4.33	Width of aisle for pallet 1000 x 1200 crossways	Ast	mm	5186
	4.35	Turning radius	Wa	mm	3370
PERFORMANCES	5.1	Speed of travel unladen 2WD/4WD		km/h	25 / 14
	5.2	Speed of raise laden / unladen		m/s	0,4 / 0,4
	5.3	Speed of lowering laden / unladen		m/s	0,4 / 0,4
	5.5	Nominal towing power laden / unladen		daN	1860 / 1950
	5.7	Gradeability with / without load		%	37 / 65
	5.10	Service brake			Hydraulic
MOTORS	7.1	Manufacturer / Type of engine			KUBOTA / V1505
	7.2	Power delivery		kW	26,5
	7.3	Rated speed		tr/min	3000
	7.4	Number of pistons / Cubic capcity		cm^3	4- 1498
	7.5	Fuel consumption acc. to VDI cycle		L/h	4
MISCELLAN.	8.1	Power control			Cable
	8.2	Operating pressure for attachments		bar	180
	8.3	Oil flow for attachments		l/min	39
	8.4	Average noise level for the driver (in motion) measured / guaranteed		db (A)	81

1- Values with Duplex mast

Data is based on standard configurations (forks, mast).
Performance data and dimensions are nominal and subject to tolerances.
Manitou products and their specifications are subject to change without notice.

MANITOU

DIMENSIONAL DRAWINGS

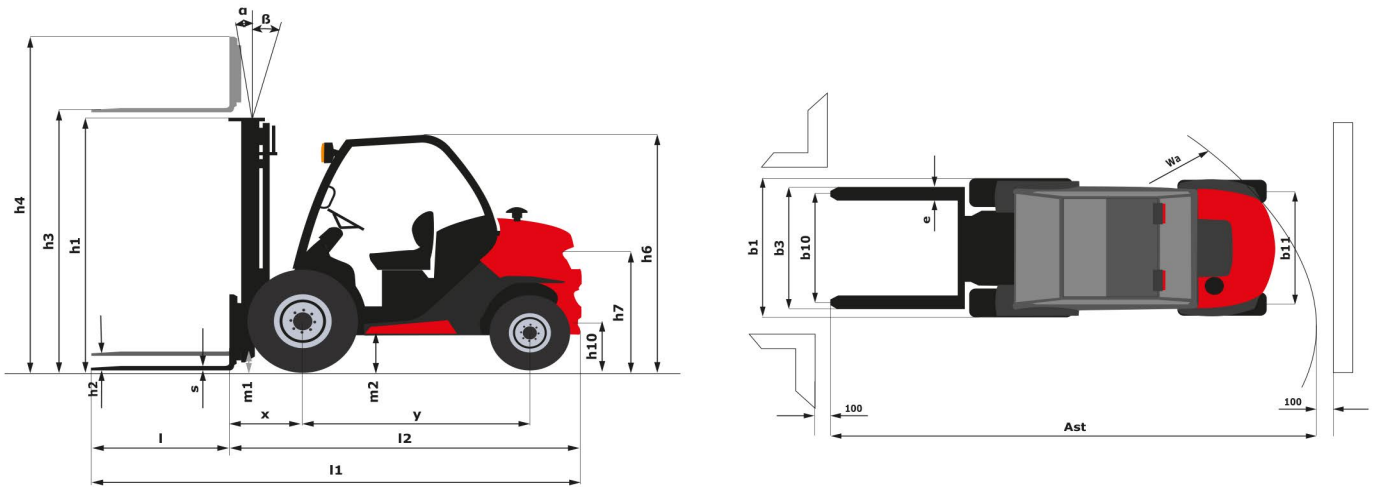

MASTS AND RESIDUAL CAPACITIES

MC 18			Triplex free lift	
			TLL37	TLL43
h3	Lift height	mm	3700	4300
h1	Height mast lowered	mm	1990	2190
h2	Free lift	mm	1216	1416
h4	Height mast extended w/o backrest	mm	4514	5114
	Residual capacity w/o attachment	kg	1800	1000
	Tilt of mast forwards / backwards	deg	10 / 12	10 / 12