duma rent
www.duma-rent.com

MANITOU
HANDLING YOUR WORLD

647532 EN (20/09/2017)

160 ATJ PLUS Euro 3

OPERATOR'S MANUAL
(ORIGINAL INSTRUCTIONS)

IMPORTANT

Carefully read and understand this instruction manual before using the lifting platform.

It contains all information relating to operation, handling and lifting platform equipment, as well as important recommendations to be followed.

This document also contains precautions for use, as well as information on the servicing and routine maintenance required to ensure the lifting platform's continued safety of use and reliability.

WHENEVER YOU SEE THIS SYMBOL IT MEANS:

⚠ IMPORTANT ⚠

WARNING ! BE CAREFUL ! YOUR SAFETY OR THE SAFETY OF THE LIFTING PLATFORM IS AT RISK.

- This manual has been produced on the basis of the equipment list and the technical characteristics given at the time of its design.
- The level of equipment of the lifting platform depends on the options chosen and the country of sale.
- According to the lifting platform options and the date of sale, certain items of equipment/functions described herein may not be available.
- Descriptions and figures are non binding.
- MANITOU reserves the right to change its models and their equipment without being required to update this manual.
- The MANITOU network, consisting exclusively of qualified professionals, is at your disposal to answer all your questions.
- This manual is an integral part of the lifting platform.
- It is to be kept in its storage space at all times for ease of reference.
- Hand this manual to the new owner if the lifting platform is resold.

647121 (20/10/2017)
MHx735/741/1035 LSU S6-E3

1st ISSUE	23/01/2015	
UPDATED	20/09/2017	1-20 ; 2-3 ; 2-8 ; 2-12 ; 2-20 <-> 2-23 ; 2-31 ; 2-33 ; 2-35 ; 2-40 ; 2-46 ; 2-51 ; 3-6 ; 3-7 ; 3-9 ; 3-10 <-> 3-12 ; 3-19 <-> 3-21 ; 3-24 <-> 3-26 ; 3-30 <-> 3-32 ; 3-34 <-> 3-37 ; 4-1 <-> 4-12

Manitou BF S.A Limited liability company with a Board of Directors.
Head office: 430, Rue de l'Aubinière - 44150 Ancenis - FRANCE
Share capital: 39,548,949 euros
857 802 508 RCS Nantes.
Tel: +33 (0)2 40 09 10 11
www.manitou.com

This manual is for information purposes only. Any reproduction, copy, representation, recording, transfer, distribution, or other, in part or in whole, in any format is prohibited. The plans, designs, views, commentaries and instructions, even the document organization that are found in this document, are the intellectual property of MANITOU BF. Any violation of the aforementioned may lead to civil and criminal prosecution. The logos as well as the visual identity of the company are the property of MANITOU BF and may not be used without express and formal authorization. All rights are reserved.

647121 (20/10/2017)
Mlt-x 735/741/1035 LSU S6-E3

1 - OPERATING AND SAFETY INSTRUCTIONS

2 - DESCRIPTION

3 - MAINTENANCE

4 - ATTACHMENTS

647121 (20/10/2017)
Mlt-x 735/741/1035 LSU S6-E3

1 - OPERATING AND SAFETY INSTRUCTIONS

TABLE DES MATIÈRES

INSTRUCTIONS TO THE COMPANY MANAGER	***1-4***
Foreword	1-4
Site	1-4
Operator	1-4
Platform	1-4
Instructions	1-5
Maintenance	1-5
INSTRUCTIONS TO THE OPERATOR	***1-6***
Foreword	1-6
General instructions	1-6
Driving instructions	1-8
Instructions for welding and blow torch work on an external structure	1-15
PLATFORM MAINTENANCE INSTRUCTIONS	***1-16***
General instructions	1-16
maintenance	1-16
Lubricant and fuel levels	1-16
Battery electrolyte level	1-16
Hydraulics	1-17
Electricity	1-17
Welding on the access platform	1-17
Washing the platform	1-17
IF THE PLATFORM IS NOT TO BE USED FOR A LONG TIME	***1-18***
Introduction	1-18
Preparing the platform	1-18
Protecting the I.C. engine	1-18
Battery charge	1-19
Protecting the platform	1-19
Bringing the platform back into service	1-19
DISPOSING OF THE PLATFORM	***1-20***
SAFETY DECALS	***1-22***

INSTRUCTIONS TO THE COMPANY MANAGER

FOREWORD

WHENEVER YOU SEE THIS SYMBOL IT MEANS:

WARNING! BE CAREFUL! YOUR SAFETY

OR THE SAFETY OF THE PLATFORM IS AT RISK.

SITE

- Proper management of the personnel lifting platform's area of travel will reduce the risk of accidents:
  - ground not unnecessarily uneven or obstructed,
  - no excessive slopes,
  - pedestrian traffic controlled, etc.

OPERATOR

- Only qualified, authorised personnel can use the platform. This authorisation is given in writing by the appropriate person in the establishment where the platform is to be used and must be carried permanently by the operator.

Experience has shown that there are a number of inappropriate ways in which the platform might be used. Such foreseeable misuse, of which the main examples are listed below, are strictly forbidden.

- The foreseeable abnormal behaviour resulting from ordinary negligence, but which does not result from any wish to put the machinery to any improper use.
  The reflex behaviour of a person in the event of a malfunction, incident, failure, etc. during use of the platform.
- Behaviour resulting from application of the "principle of least effort" when performing a task.
- For certain machines, the foreseeable behaviour of such persons as: apprentices, teenagers, handicapped persons, trainees tempted to drive a platform, operators tempted to operate a truck to win a bet, in competition or for their own personal experience.
- The person in charge of the equipment must take these criteria into account when assessing the suitability of a person to drive.

OBTAIN INFORMATION ON:

- How to behave when there is a fire.
- The location of the nearest first aid kit and fire extinguisher.
- The emergency telephone numbers for calling (the doctors, ambulance, hospital and fire brigade).

PLATFORM

A - THE PLATFORM'S SUITABILITY FOR USE

- MANITOU has ensured that this platform is suitable for use under the standard operating conditions defined in this operator's manual, with an overload test coefficient of 1.25 and an operational test coefficient of 1.1, as stipulated in standard EN 280 for MPLP (Mobile Personnel Lifting Platforms).
  Before putting the platform into operation, the company manager must check that the platform is suitable for the work to be carried out and conduct certain tests (in accordance with current legislation).

B - ADAPTING THE PLATFORM TO THE USUAL ENVIRONMENTAL CONDITIONS

- In addition to series equipment mounted on your platform, many options are available, such as: rotating light, working light, etc. Contact your dealer.
- Take into account climatic and atmospheric conditions of the site of utilisation.
  - Protection against frost (see: chapter 3 - MAINTENANCE, LUBRICANTS page).
  - Adaptation of lubricants (ask your dealer for information).
  - I.C. engine filtration (see: chapter 3 - MAINTENANCE, FILTER ELEMENTS page).

- The machines manufactured by MANITOU are designed to be used within the following temperature ranges:
  - Minimum temperature: -20°C
  - Maximum temperature: +45°C
- Special applications are available as options for particularly cold environments.

The factory fill of lubricants is for average climatic conditions, i.e. between -15°C and +35°C. For operation under more severe climatic conditions, before starting up, the systems should be drained and refilled using lubricants suited to the ambient temperatures.

- A platform operating in an area without fire extinguishing equipment must be equipped with an individual extinguisher. There are solutions, consult your dealer.

Your platform may be designed for outdoor use (see: chapter 2 - DESCRIPTION, SPECIFICATIONS pages) under normal atmospheric conditions and indoor use in suitably aerated and ventilated premises. It is prohibited to use the platform in areas where there is a risk of fire or which are potentially explosive (e.g. refineries, fuel or gas depots, stores of flammable products, etc.). For use in these areas, specific equipment is available (ask your dealer for information).

C - Modifying the platform

- For your own safety and that of others, you must not change the structure and settings of the various components used in your platform by yourself (hydraulic pressure, limiter calibration, engine speed, addition of extra equipment, addition of counterweights, unapproved attachments, alarm systems, etc.). In this event, the manufacturer cannot be held liable.
- Your platform is supplied with standard wheels or all-terrain wheels. It is PROHIBITED to change from one type of wheel to the other: risk of loss of stability of the platform.

Instructions

- The operator's manual must always be in good condition and kept in the place provided on the platform and in the language used by the operator.
- You must replace the instructions manual, as well as any plates or stickers, if they are no longer legible or are missing or damaged.

Maintenance

- Maintenance or repairs other than those detailed in chapter: 3 - MAINTENANCE must be carried out by qualified personnel (consult your dealer) and under the necessary safety conditions to maintain the health of the operator and any third party.

Your platform must be inspected periodically to ensure that it remains in compliance. The frequency of this inspection is defined by the current legislation applying in the country in which the platform is used.

- Example for France: The manager in charge of the establishment using an access platform must open and maintain a maintenance log for each machine (order of 2 March 2004).

INSTRUCTIONS TO THE OPERATOR

FOREWORD

WHENEVER YOU SEE THIS SYMBOL IT MEANS:

WARNING! BE CAREFUL! YOUR SAFETY

OR THE SAFETY OF THE PLATFORM IS AT RISK.

The risk of accident while using, servicing or repairing your platform can be restricted if you follow the safety instructions and safety measures detailed in these instructions.

- Only the operations and manoeuvres described in this operator's manual must be performed. The manufacturer cannot predict all possible risky situations. Consequently, the safety instructions given in the operator's manual and on the platform itself are not exhaustive.
- At all times as an operator you must envisage, within reason, the possible risk to yourself, to others or to the platform itself when you use it.

Failure to respect the safety and operating instructions, or the instructions for repairing or servicing your platform may lead to serious, even fatal accident.

GENERAL INSTRUCTIONS

A - OPERATOR'S MANUAL

- Carefully read and understand the operator's manual.
- The operator’s manual must always be kept in the place provided for it on the platform and be written in the language used by the operator.
- Any operations or manoeuvres not described in the operator’s manual are categorically forbidden.
- Follow the safety advice and the instructions on the platform.
- You must necessarily replace the operator’s manual, as well as any plates or stickers, if they are no longer legible or are damaged.
- A second operator must be present on the ground as a safety measure when using the platform.
- Familiarise yourself with the platform on the terrain where it will be used.
- The machine must also be used in accordance with good engineering practice.
- Do not use the platform if there is a wind speed of over 45 km/h. The platform’s arms must not be subjected to a lateral force of more than 40 kg (platforms for indoor use must not be used outside the building).

B - AUTHORIZATION FOR USE IN FRANCE
(OR SEE CURRENT LEGISLATION IN OTHER COUNTRIES)

- Only qualified, authorised personnel can use the platform. This authorisation is given in writing by the appropriate person in the establishment where the platform is to be used and must be carried permanently by the operator.
- The operator is not competent to authorise the driving of the platform by another person.

647121 (20/10/2017)
MHx735/741/1035 LSU S6-E3

C - Maintenance

- The operator must immediately advise his superior if his platform is not in good working order or does not comply with the safety notice.
- The operator is prohibited from carrying out any repairs or adjustments himself, unless he has been trained for this purpose. He must keep the platform properly cleaned if this is among his responsibilities.
- The operator must carry out daily maintenance (see: chapter: 3 - MAINTENANCE, A - DAILY pages).
- The operator must ensure tyres are adapted to the nature of the ground (see: area of the contact surface of the tyres in chapter 2 - DESCRIPTION: CHARACTERISTICS). There are optional solutions, consult your dealer.

Do not use the platform if the tyres are damaged or excessively worn, because this could put your own safety or that of others at risk, or cause damage to the platform itself.

In the case of electric platforms, the operator must ensure that:
- **The batteries are not replaced with lighter ones (compromising stability).**
- **Safety goggles are always worn when charging the batteries.**
- **The batteries are not charged in an explosive environment.**
- **There is no smoking and no naked flame directed towards the batteries when they are being handled;**
- **during removal, re-installation and when checking the levels.**

D - Modifying the platform

- For your safety and that of others, you must not change the structure and settings of the various components used in your platform yourself:
  - hydraulic pressure,
  - calibrating limiters,
  - I.C. engine speed,
  - addition of extra equipment,
  - addition of counterweight,
  - unapproved attachments,
  - alarm systems, etc.
- In this event, the manufacturer cannot be held responsible.

Your platform is supplied with standard wheels or all-terrain wheels. It is PROHIBITED to change from one type of wheel to the other: risk of loss of stability of the platform.

E - I.C. platform axles

- Standard axle:

The chassis is rigid, so the platform can be load bearing on only three wheels.

- Oscillating axle (if this option is available):

The oscillating axle enables the platform, in the transport position, to have load-bearing on four wheels. When moving in the working position over uneven terrain, the oscillating axle is locked (the chassis is rigid) so the platform can be load bearing on only three wheels.

DRIVING INSTRUCTIONS

A - BEFORE STARTING THE PLATFORM

- Ensure that the intermediate rail is fully in the locked position before operating the platform from the basket.
- If the platform is new, see the section: Before starting the platform for the first time in chapter 1 - operating and safety instructions.
- Carry out daily maintenance (see: chapter 3 - MAINTENANCE, A - DAILY pages).
- Before starting the platform, check the levels:

• I.C. PLATFORMS:	• ELECTRIC PLATFORMS:
• Engine oil	• Hydraulic tank oil
• Hydraulic tank oil	• Battery charge level
• Fuel	
• Coolant	

- The platform must be in transport position (with the arms completely folded back or the scissors in the low position) before you enter it.
- Make sure the horn works.
- Check before operating the platform that the access gate has been properly locked.

B - DRIVER'S CAB OPERATING INSTRUCTIONS

- Whatever his experience, the operator is advised to familiarise himself with the position and operation of all the controls and instruments before operating the platform.
- Wear suitable clothing for driving the platform; do not wear baggy clothes.
- Make sure you have the appropriate protective equipment for the job to be done.
- Prolonged exposure to high noise levels may cause hearing problems. It is recommended to wear ear muffs to protect against excessive noise.
- Remain alert at all times when using the platform. Do not listen to the radio or music using headphones or earphones.
- For increased comfort, adopt the correct position at the platform's operator station.
- The operator must always be in the normal operator's position: it is prohibited to have arms or legs, or generally any part of the body, protruding from the basket.
- Safety helmets must be worn.
- MANITOU recommends a safety harness in the operator’s size be provided when the platform is in use (for the harness attachment in the basket , see chapter 2 - DESCRIPTION, CHECKING AND CONTROL INSTRUMENTS pages).
- The control units must never in any event be used for any other than their intended purposes (e.g. climbing onto or down from the platform, portmanteau, etc.).
- In the case of scissors-type platforms, it is forbidden to use the platform without the guardrails in place.
- Suspending a load under the basket or on any part of the lifting apparatus is strictly forbidden.
- The operator must not climb into or get down from the basket unless it is at ground level (with the lifting system folded).
- If the platform is equipped with steps, the basket must be positioned vertically with these before going up or down.
- The platform must not be fitted with attachments that increase the unit's wind load.
- Do not use a ladder or any improvised constructions in the basket to reach greater heights.
- Do not climb on the sides of the basket to reach greater heights.
- Never operate the platform when hands or feet are wet or soiled with greasy substances.

C - ENVIRONMENT

- Comply with site safety regulations.
- The platform can be manoeuvred from the ground: ensure that you forbid access.
- If you have to use the platform in a dark area or at night, make sure it is equipped with working lights.
- The platforms may not be used as cranes or elevators for the permanent transport of people or materials, nor as jacks or supports.
- When operating, ensure that there is no one or anything impeding the platform’s progress and operation.
- When raising the platform, ensure that no one or anything impedes the platform’s operation and do not perform any inappropriate manoeuvres.

- Do not allow anybody to come near the working area of the platform or pass beneath an elevated load. To ensure this, mark out your working area.
- Travelling on a longitudinal slope:
  - Ensure that you adapt the access platform's travel speed by controlling it with the joystick.
- Take into account the platform's dimensions and its load before trying to negotiate a narrow or low passageway.
- Never move onto a loading platform without having first checked:
  - That it is suitably positioned and made fast.
  - That the unit to which it is connected (wagon, lorry, etc.) will not shift.
  - That this bridge is prescribed for the size and weight of the platform.
  - That the slope of the bridge is not greater than the platform's maximum authorised slope.
- Never move onto a foot bridge, floor or freight lift, without being certain that they are prescribed for the weight and size of the platform to be loaded and without having checked that they are in sound working order.
- Be careful in the area of loading bays, trenches, scaffolding, soft ground and manholes.
- Ensure that the ground under the wheels and/or stabilisers is firm and stable before raising the basket.
- Do not attempt any operations outside the platform's capabilities.
- Ensure that any materials loaded onto the platform (pipes, cables, containers, etc.) cannot fall out. Do not pile these materials to the point where it is necessary to step over them.

If the platform must remain above a structure for a long time, there is the risk that it will rest on the structure as a result of the basket descending due to the cooling of the oil in the cylinders or minor leakage from the cylinder blocking systems. To eliminate this risk:
- Regularly check the distance between the basket and the structure, readjust if necessary.
- If possible, use the platform with the oil at a temperature as close as possible to the ambient temperature.

- In the case of work near aerial lines, ensure that the safety distance is sufficient between the working area of the platform and the aerial line.

You must consult your local electrical agency. You could be electrocuted or seriously injured if you operate or park the platform too close to power cables.

If the platform is in contact with electric cables, press the emergency stop button. If you can, jump out of the basket without touching the basket and the ground at the same time.
Otherwise call for help, inform people not to touch the platform, or cut off or have someone else cut off the electricity supply to the cables.

- It is forbidden to use the platform close to electricity cables. Maintain the specified safe distances.

RATED VOLTAGE	DISTANCE ABOVE THE GROUND OR THE FLOOR IN METRES
50 < U < 1 000	2.30 M
1 000 < U < 30 000	2.50 M
30 000 < U < 45 000	2.60 M
45 000 < U < 63 000	2.80 M
63 000 < U < 90 000	3.00 M
90 000 < U < 150 000	3.40 M
150 000 < U < 225 000	4.00 M
225 000 < U < 400 000	5.30 M
400 000 < U < 750 000	7.90 M

If the wind is in excess of 45 km/h, do not perform any movements liable to endanger the access platform's stability.

- To visually recognise this wind speed, refer to the empirical wind evaluation scale below:

BEAUFORT scale (wind speed at a height of 10 m on a flat site)						
Force	Type of wind	Speed (knots)	Speed (km/h)	Speed (m/s)	Effects on Land	Sea conditions
0	Calm	0 - 1	0 - 1	<0.3	Smoke rises vertically.	Sea is like a mirror.
1	Light air	1 - 3	1 - 5	0.3 - 1.5	Smoke indicates direction of wind.	Ripples with appearance of scale, no foam crests.
2	Light breeze	4 - 6	6 - 11	1.6 - 3.3	Wind felt on face, leaves rustle.	Short wavelets, but pronounced.
3	Gentle breeze	7 - 10	12 - 19	3.4 - 5.4	Leaves and small twigs in constant motion.	Very small waves, crests begin to break.
4	Moderate breeze	11 - 16	20 - 28	5.5 - 7.9	Wind raises dust and loose pieces of paper; small branches are moved.	Small waves, becoming longer, numerous whitecaps.
5	Fresh breeze	17 - 21	29 - 38	8 - 10.7	Small tees in leaf begin to sway.	Wavelets form on inland waters; moderate waves, taking longer form.
6	Strong breeze	22 - 27	39 - 49	10.8 - 13.8	Large branches in motion, whistling heard in overhead wires, umbrella use becomes difficult.	Larger waves forming, whitecaps everywhere, some spray.
7	Near gale	28 - 33	50 - 61	13.9 - 17.1	Whole trees in motion, inconvenience felt when walking against the wind.	Sea heaps up; white foam from breaking waves begins to be blown in streaks along the direction of the wind.
8	Gale	34 - 40	62 - 74	17.2 - 20.7	Wind breaks twigs off trees; impedes progress.	Moderately high waves of greater length; edges of crests begin to break into spindrift.
9	Strong gale	41 - 47	75 - 88	20.8 - 24.4	Wind damages roofs (chimneys, slates, etc.).	High waves, crests of waves begin to topple, streaks of foam; reduced visibility.
10	Storm	48 - 55	89 - 102	24.5 - 28.4	Seldom experienced inland; trees uprooted; considerable structural damage occurs.	Very high waves; white streaks of foam; reduced visibility.
11	Violent storm	56 - 63	103 - 117	28.5 - 32.6	Very rare, widespread damage.	Exceptionally high waves able to hide medium sized ships from view, reduced visibility.
12	Hurricane	64 +	118 +	32.7 +	Devastating damage.	Sea completely white; air filled with foam and spray, very reduced visibility.

647121 (20/10/2017)
MII-x 735/741/1035 LSU S6-E3

D - Visibility

- Ensure good visibility on your route at all times. To increase your visibility, you can move forwards with the jib arm slightly raised (beware of the risk of falls in the basket from knocking into a low doorway, overhead electric wires, travelling cranes, highway bridges, rail tracks or any obstacle in the area in front of the platform). In reverse, look directly behind you. At all events, avoid reversing long distances.
- If visibility of your road is inadequate, ask someone to help, standing outside the area in which the platform will be moving, and make sure you always have a good view of this person.

E - Starting the platform

PLATFORMS WITH I.C. ENGINES

SAFETY INSTRUCTIONS

- Never try to start the platform by pushing or towing it. Such operation may cause severe damage to the transmission. If towing is necessary, the platform must be placed in freewheel mode (see: 3 - MAINTENANCE).
- If using an emergency battery for start-up, use a battery with the same characteristics and respect battery polarity when connecting it. Connect at first the positive terminals before the negative terminals.

Failure to respect polarity between batteries can cause serious damage to the electrical circuit.
The electrolyte in the battery may produce an explosive gas. Avoid flames and generation of sparks close to the batteries. Never disconnect a battery while it is charging.

INSTRUCTIONS

- Check the closing and locking of the hood(s).
- Turn the ignition key to position I to switch on the electrical power, which automatically starts the preheating system (all the bars must be displayed), the message "OK" is displayed.
- Check that everything is operating correctly by ensuring that no fault pages are displayed on the screen and no warning about the fuel level (a pump icon is present on the screen) (see: chapter 2 - DESCRIPTION, CHECKING AND CONTROL INSTRUMENTS pages).
- To start, turn the ignition key to position I.
- Press the start button.
- Do not engage the starter motor for more than 15 seconds and carry out the preheating for 10 seconds between unsuccessful attempts.
- Check all control instruments when the I.C. engine is warm and at regular intervals during use, so as to quickly detect any faults and to be able to correct them without any delay.
- If any faults are displayed on the screen, stop the engine and immediately take the necessary measures.

ELECTRIC PLATFORMS

SAFETY INSTRUCTIONS

- Do not use the platform if the battery is discharged to the point that movements are slowed down. In certain cases, the platform may stop (see: chapter 3 - MAINTENANCE: page DAILY OR EVERY 10 HOURS SERVICE, for the charge level not to be exceeded).

INSTRUCTIONS

- Set the battery cut-off to the ON position.
- Check the closing and locking of the hood(s).
- Turn the ignition key to the basket position.
- Check that everything is operating correctly by ensuring that no error messages are displayed on the screen and that the machine maintenance light is not flashing (see: chapter 2 - DESCRIPTION, CHECKING AND CONTROL INSTRUMENTS pages).

  NOTE: For machines not fitted with a display or a maintenance warning light, faults can be identified from the light directly on the variable speed drive unit (to access: open the cowl on the control side, remove the casing from the variable speed drive and see whether the light is flashing).

- If any error messages are constantly displayed or the machine maintenance light is flashing, return the key to the neutral position.
- Set the battery cut-off to the OFF position.
- Immediately take the necessary measures.

F - Driving the platform

SAFETY NOTICE

We draw the operators' attention to the risks associated with using the platform, in particular:
- Risk of loss of control.
- Risk of loss of lateral and frontal stability of the platform.
The operator must remain in control of the platform.

- Do not carry out operations which exceed the capacities of your platform.
- Familiarise yourself with the platform on the terrain where it will be used.
- Ensure that the brakes work efficiently when stopping a travelling movement, taking into account the braking distances.
- Drive smoothly at an appropriate speed for the operating conditions (land configuration, load in the basket).
- Take extreme care when manoeuvring the platform with the basket in the high position. Ensure that there is sufficient visibility.
- Take bends slowly.
- In all circumstances make sure you are in control of your speed.
- Travel slowly on damp, slippery or uneven terrain or on truck ramps.
- Always remember that the hydraulic steering is very sensitive to movements.
- Never leave the I.C. engine on when the platform is unattended.
- Look where you are going and always make sure you have good visibility along the route.
- Drive round obstacles.
- Never drive on the edge of a ditch or steep slope.
- Whatever your travelling speed, you must reduce the speed as much as possible before stopping.
- The platform should be operated in an area free of any obstructions or danger when it is lowered to the ground.
- The operator using the platform must be aided on the ground by a person with adequate training.
- You should stay within the limits set out in the platform load chart.

INSTRUCTIONS

- When moving the platform a long distance, always travel with the arms folded or the scissors in the low position.
- Engage the appropriate gear (see: chapter 2 - DESCRIPTION, CHECKING AND CONTROL INSTRUMENTS pages).

G - Stopping the platform

SAFETY NOTICE

- Never leave the ignition key in the platform during the operator's absence.
- Make sure that the platform is not stopped in any position that will interfere with the traffic flow and in particular the platform should not be at less than one metre from a railroad track.
- In the event of prolonged parking on a site, protect the platform from bad weather, particularly from frost (check the level of antifreeze), and close and lock all the platform accesses (cowls, etc.).
- Park the platform on flat ground or on an incline lower than 10%.

INSTRUCTIONS

PLATFORMS WITH I.C. ENGINES

- Before stopping the platform after a long working period, leave the I.C. engine idling for a few moments, to allow the coolant and oil to lower the temperature of the I.C. engine and transmission.

Do not forget this precaution, in the event of frequent stops or warm stalling of the engine, otherwise the temperature of certain parts will rise significantly due to the stopping of the cooling system, with the risk of severely damaging such parts.

- Stop the engine with the ignition switch.
- Remove the ignition key.
- Check that all the accesses on the platform are closed and locked (cowls, etc.).

ELECTRIC PLATFORMS

- Remove the ground/platform control selection key.
- Check that all the accesses on the platform are closed and locked (cowls…).
- Set the battery cut-off to the OFF position (ELECTRIC PLATFORM). Hydraulic oil level.

INSTRUCTIONS FOR WELDING AND BLOW TORCH WORK ON AN EXTERNAL STRUCTURE

Ensure that there are no hydraulic or electrolyte leaks on the platform.

When welding, work in the opposite direction from the control console to avoid sparks damaging it.

- Any welding and cutting (blow torch) work from the basket on a building's metallic structures requires the following precautions to be taken:

A - WITH AN ELECTRICAL WELDING SET

- It is essential that the machine has a discharge braid connecting the chassis of the platform to the ground.
- The external structure to be welded must, without fail, be grounded. If the above conditions are observed, the platform can, in this case, be in contact with the structure or the elements to be welded without damaging the electronic components.
- The power supply to the welding equipment must be via a grounded socked, including the extension lead if required.
- In all cases, make sure that there are no electric arcs in the basket or on the platform (contact between the rod or torch and ground connector of the welding equipment). For this the ground connector of the welding must never be placed on the platform's basket; it must only be placed as close as possible to the part to be welded.
- Switch off the welding equipment before disconnecting the ground clamp from the element or elements to be welded.

B - WITH A BLOW TORCH

- Attach the blow torch's bottles to the basket's handrails.
- Sparks and clippings must not be directed towards the batteries.
- Do not set the blow torch down on the lip of the basket while it is still operating or point it towards the control console or its power cables.

PLATFORM MAINTENANCE INSTRUCTIONS

GENERAL INSTRUCTIONS

- Make sure the area is adequately ventilated before starting up the platform.
- Wear clothes suitable for the maintenance of the lift truck, avoid wearing jewellery and loose clothes. Tie and protect your hair, if necessary.
- Stop the I.C. engine before conducting any work on the platform, remove the ignition key and disconnect the "Minus" battery terminal.
- Set the battery cut-off to the OFF position (ELECTRIC PLATFORM).
- Read the operator's manual carefully.
- Carry out all repairs immediately, even if the repairs concerned are minor.
- Repair all leaks immediately, even if the leak concerned is minor.
- Ensure that process materials and of spare parts are disposed in all safely and in an ecological manner.
- Be careful of the risk of burning and splashing (exhaust, radiator, engine, etc.).

MAINTENANCE

- Perform the periodic service (see: 3 - MAINTENANCE) to keep your platform in good working condition. Failure to perform the periodic service may annul the contractual guarantee.

MAINTENANCE LOGBOOK

- The maintenance operations carried out in accordance with the recommendations given in part 3 - MAINTENANCE and the other inspection, servicing or repair operations or modifications performed on the platform shall be recorded in a maintenance logbook. The entry for each operation shall include details of the date of the works, the names of the individuals or companies having performed them, the type of operation and its frequency, if applicable. The part numbers of any platform items replaced shall also be indicated.

LUBRICANT AND FUEL LEVELS

- Use the recommended lubricants (never use contaminated lubricants).
- Do not fill the fuel tank when the engine is running.
- Only fill up the fuel tank in areas specified for this purpose.
- Do not fill the fuel tank to the maximum level.
- Do not smoke or approach the platform with a flame, when the fuel tank is open or is being filled.

BATTERY ELECTROLYTE LEVEL

- Check the level of the battery or batteries.

When doing this, ensure you take all the safety precautions (see: 3 - MAINTENANCE).

647121 (20/10/2017)
MHx735/741/1035 LSU S6-E3

HYDRAULICS

- Make any repairs and fix any leaks, including minor ones, immediately.
- Do not attempt to loosen unions, hoses or any hydraulic component while the circuit is under pressure.

BALANCING VALVE: It is dangerous to change the setting or remove the balancing valves or safety valves which may be fitted to your platform cylinders. These operations must only be performed by approved personnel (consult your dealer).

Ensure that all consumables and replacement parts are disposed of safely, in an environmentally friendly manner.

The HYDRAULIC ACCUMULATORS that may be fitted on your platform are pressurised units. Removing these accumulators and their pipework is a dangerous operation and must only be performed by approved personnel (consult your dealer).

ELECTRICITY

- Do not drop metallic items on the battery (between the "Plus" and "Minus" terminals).
- Disconnect the battery or batteries before working on the electrical circuit.
- The electrical box must only be opened by authorised personnel.

WELDING ON THE ACCESS PLATFORM

- Disconnect the battery or batteries before welding on the platform.
- When carrying out electric welding work on the platform, connect the negative cable from the welding equipment directly to the part being welded, so as to avoid high tension current passing through the alternator or the slewing ring.
- If the platform is equipped with an electronic control unit, disconnect this before starting to weld, to avoid the risk of causing irreparable damage to electronic components.

Welding operations for the purposes of maintenance or repairs must only be carried out by persons authorised by MANITOU.

WASHING THE PLATFORM

- Clean the platform or at least the area concerned before any intervention.
- Remember to close and lock all accesses to the platform (cowls, etc.).
- When cleaning with a pressure washer, avoid the articulation joints, and the electrical components and connections.
- If necessary, protect components likely to be damaged, and in particular the electrical components (variable speed drive, charger) and connections and the injection pump from penetration by water, steam or cleaning products.
- Dry the electrical components.
- Clean the platform of any fuel, oil or grease trace.
- Grease the shafts.

FOR ANY OPERATIONS OTHER THAN REGULAR MAINTENANCE OPERATIONS, CONSULT YOUR DEALER

IF THE PLATFORM IS NOT TO BE USED FOR A LONG TIME

INTRODUCTION

The following recommendations are intended to prevent the platform from being damaged when it is withdrawn from service for an extended period.
For these operations, we recommend the use of a MANITOU protective product, reference 603726.
Instructions for using the product are given on the packaging.

Procedures to follow if the platform is not to be used for a long time and for starting it up again afterwards must be performed by your dealership.

PREPARING THE PLATFORM

- Clean the platform thoroughly.
- Check and repair any leakage of fuel, oil, water or air.
- Replace or repair any worn or damaged parts.
- Wash the painted surfaces of the platform in clear and cold water and wipe them.
- Touch up the paintwork if necessary.
- Shut down the platform (see: OPERATING INSTRUCTIONS UNLADEN AND LADEN).
- Make sure the cylinder rods are all in the retracted position.
- Release the pressure in the hydraulic circuits.

PROTECTING THE I.C. ENGINE

- Fill the tank with fuel (see: 3 - MAINTENANCE).
- Empty and replace the coolant (see: 3 - MAINTENANCE).
- Leave the I.C. engine running at idling speed for a few minutes, then switch off.
- Replace the I.C. engine oil and oil filter (see: 3 - MAINTENANCE).
- Add the protective product for engine oil.
- Run the I.C. engine for a short time so that the oil and coolant circulate inside.
- Disconnect the battery and store it in a safe place away from the cold, after charging it to a maximum.
- Remove the injectors and spray the protective product into each cylinder for one to two seconds with the piston at bottom dead centre.
- Turn the crankshaft once slowly and refit the injectors (see: I.C. engine REPAIR MANUAL).
- Remove the intake hose from the manifold or turbocharger and spray the protective product into the manifold or turbocharger.
- Cap the intake manifold port with waterproof adhesive tape.
- Remove the exhaust pipe and spray the protective product into the exhaust manifold.
- Refit the exhaust pipe and block the outlet of the muffler with waterproof adhesive tape.

NOTE: The spray time is noted on the product packaging.

- Open the filler plug, spray the protective product around the rocker shaft and refit the filler plug.
- Cap the fuel tank using waterproof adhesive tape.
- Remove the drive belts and store them in a safe place.
- Disconnect the engine cut-off solenoid on the injection pump and carefully insulate the connection.

BATTERY CHARGE

- In the case of electric platforms, in order to preserve the batteries' life and their capacity, check them periodically and keep the charge level constant (see: 3 - MAINTENANCE).

PROTECTING THE PLATFORM

- Protect cylinder rods which are not be retracted from corrosion.
- Wrap the tyres.
  NOTE: If the platform is to be stored outdoors, cover it with a waterproof tarpaulin.

BRINGING THE PLATFORM BACK INTO SERVICE

- Remove the waterproof adhesive tape from all the orifices.
- Refit the intake hose.
- Reconnect the engine cut-off solenoid.
- Refit and reconnect the battery.
- Remove the protection from the cylinder rods.
- Perform the daily service (see: 3 - MAINTENANCE).
- Empty and replace the fuel and replace the fuel filter (see: 3 - MAINTENANCE).
- Refit the drive belts and adjust the tension (see: 3 - MAINTENANCE).
- Turn the engine over with the starter to allow the oil pressure to rise.
- Lubricate the platform completely (see: 3 - MAINTENANCE: SERVICING SCHEDULE).

Make sure the area is adequately ventilated before starting up the platform.

- Start up the platform, following the safety instructions and regulations (see: DRIVING INSTRUCTIONS).
- Carry out all the lifting system's hydraulic movements right up to the limit switches for each cylinder.

DISPOSING OF THE PLATFORM

Consult your dealer before disposing of your platform.

RECYCLING OF MATERIALS

METALS
- Metals are 100% recoverable and recyclable.

PLASTICS
- Plastic parts are identified with a marking in accordance with current regulations.
- A limited range of materials is used to simplify the recycling process.
- The majority of plastic components are made of "thermoplastic" plastics, which are easily recycled by melting, granulating or grinding.

RUBBER
- Tyres and seals can be ground for use in cement manufacture or to obtain reusable granules.

GLASS
- Glass items can be removed and collected for processing by glaziers.

ENVIRONMENTAL PROTECTION

By entrusting the maintenance of your platform to the MANITOU network, the risk of pollution is limited and the contribution to environmental protection is made.

WORN OR DAMAGED PARTS
- Do not dump them in the countryside.
- MANITOU and its network have signed-up to a scheme of environmental protection through recycling.

USED OIL
- The MANITOU network organises the collection and processing of used oil products.
- By handing over your waste oil to MANITOU, the risk of pollution is limited.

USED BATTERIES
- Do not throw away batteries, as they contain metals that are harmful for the environment.
- Return them to the MANITOU network or any other approved collection point.

NOTE: MANITOU aims to manufacture platforms that provide the best performance and limit polluting emissions.

647121 (20/10/2017)
MRT-x 735/741/1035 LSU S6-E3

SAFETY DECALS

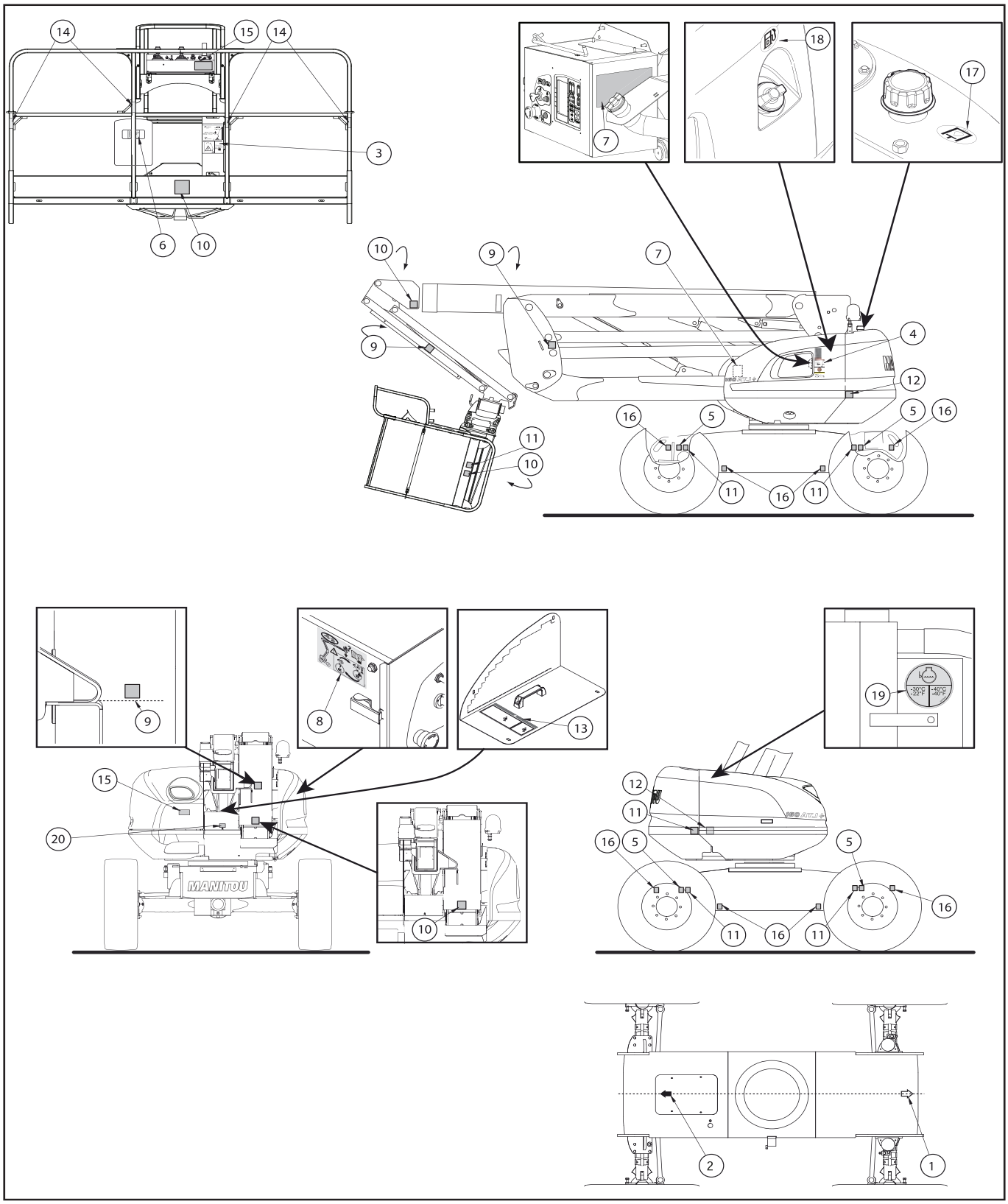

647121 (20/10/2017)
MLT-x 735/741/1035 LSU S6-E3

1 - White arrow 1-24

2 - Black arrow 1-24

3 - Basket instructions and load capacity 1-24

4a - Safety instruction 1-25

4b - Towing 1-25

4c - Washing recommendations 1-25

5 - Load on wheels 1-25

6 - Location of access platform key 1-26

7 - Manual control procedure 1-26

8 - Backup pump 1-26

9 - Hand crushing hazard 1-27

10 - Danger, keep away 1-27

11 - Danger, risk of crushing 1-27

12 - Risk of burns 1-27

13 - Arm strut 1-28

14 - Safety hook-up 1-28

15 - Washing recommendations 1-28

16 - Towing hitch 1-28

17 - Hydraulic oil 1-29

18 - Diesel 1-29

19 - Antifreeze 1-29

20 - Battery location 1-29

MEANING

1 - WHITE ARROW

This indicates the direction of travel when moving forward.

When the removable control box is turned round on the basket, the translation controls are reversed. Identify the direction of movement by looking at the arrows on the chassis and those on the basket control console.

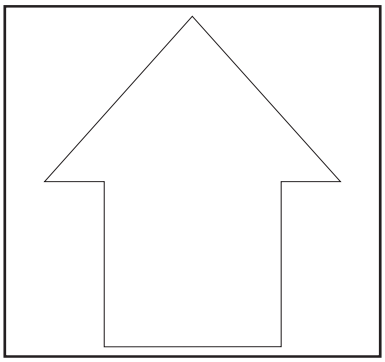

2 - BLACK ARROW

This indicates the direction of travel when reversing.

When the removable control box is turned round on the basket, the translation controls are reversed. Identify the direction of movement by looking at the arrows on the chassis and those on the basket control console.

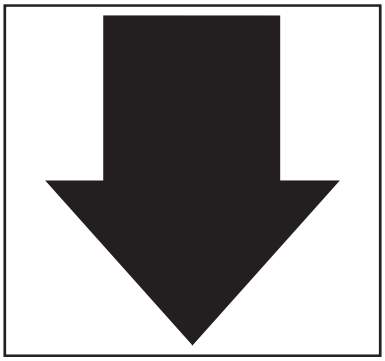

3 - BASKET INSTRUCTIONS AND LOAD CAPACITY

This describes several points:
- the platform's capacity for indoor and outdoor use.
- the risk of electric shock.
- an invitation to read the instructions for more detailed information on the safety instructions.
  NOTE: Each access platform has its own specific capacity. Please refer to this sticker for your particular access platform.

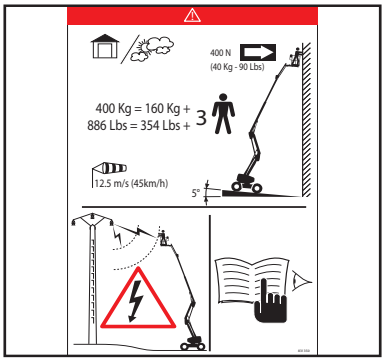

647121 (20/10/2017)
Mlt-x 735/741/1035 LSU S6-E3

4A - Safety instruction

Take note of the safety and operating instructions before you start the platform.

4B - Towing

This sticker means that the platform must not be towed in the event of breakdown.

4C - Washing recommendations

It is strictly forbidden to direct a pressure washer's nozzle over the control buttons and electrical components.

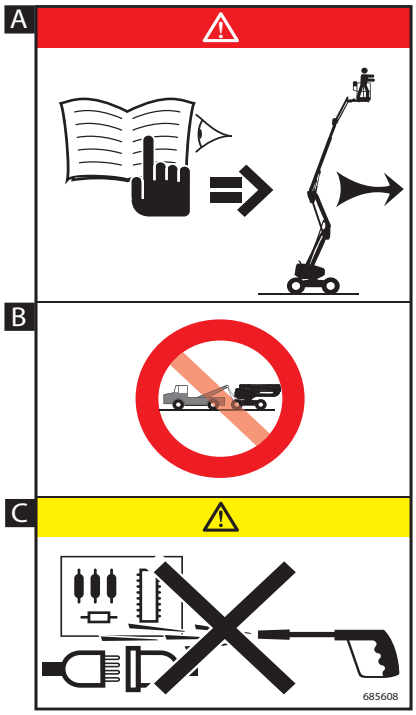

5 - Load on wheels

This indicates the maximum load that one wheel will exert on the ground (see: 2 - DESCRIPTION: SPECIFICATIONS to find out the value).

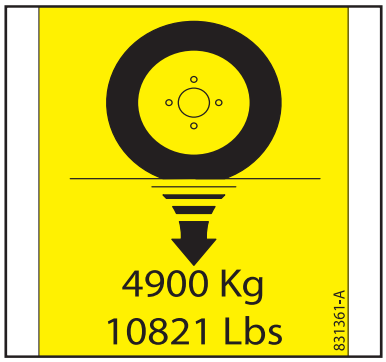

6 - Location of access platform key

The spare keys for the access platform (ignition key, control selector key, key for locking casings...) are stored in the place provided for the purpose.

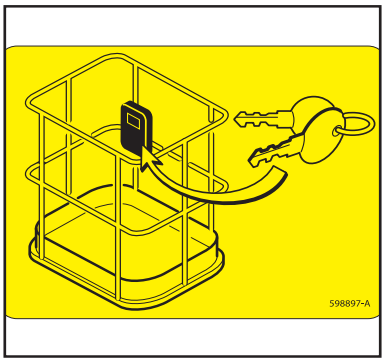

7 - Manual control procedure

This describes the procedure for performing movements with the backup pump and the manual controls, if an accident or breakdown occurs making the electrical control boxes unusable.
(see: description in CHAPTER 2).

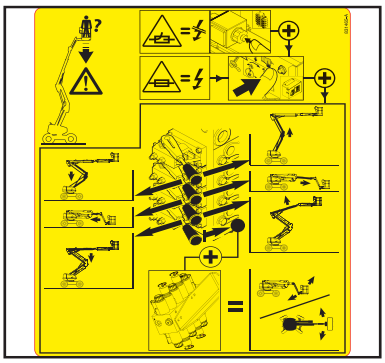

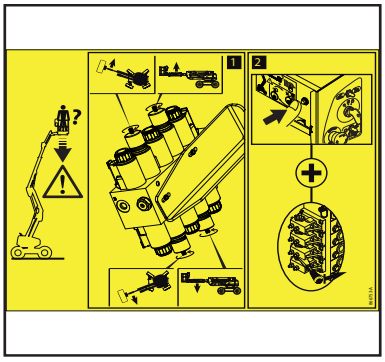

8 - Backup pump

This backup pump must only be used in the event of problems or malfunctions. The usage time must not exceed 4 minutes every 10 minutes.

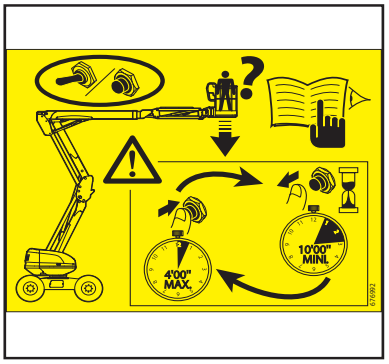

9 - Hand crushing hazard

It is strictly forbidden to place your fingers or any other part of the body in the parts of the lifting system (arm, scissors, jib, etc.); risk of crushing.

10 - Danger, keep away

It is strictly forbidden to walk under or park under the structure (arms, scissors, jib, basket, etc.) and in the access platform's operating area.

11 - Danger, risk of crushing

It is strictly prohibited to stand in this area when the platform is moving (translation, rotation, etc.). The components where the stickers are affixed could collide with you; risk of crushing.

12 - Risk of burns

This sticker means that there is a significant risk of being burnt in this area (engine muffler, engine, etc.).

13 - Arm strut

This sticker indicates use of a maintenance strut in the event of work being done on the platform in working position.

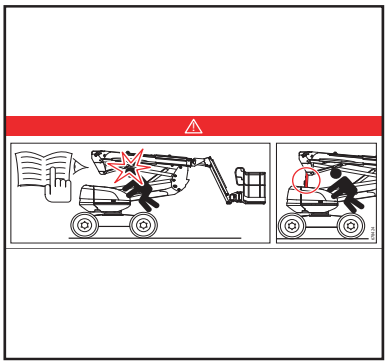

14 - Safety hook-up

This sticker indicates the place where the safety harness must be attached and the number of people per attachment point.

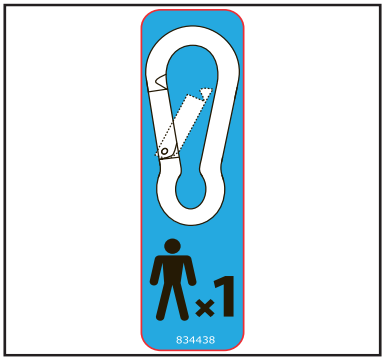

15 - Washing recommendations

It is strictly forbidden to direct a pressure washer's nozzle over the control buttons and electrical components.

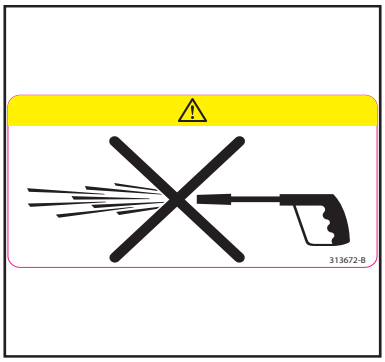

16 - Towing hitch

This sticker indicates the anchoring points for tying down the platform on the flatbed of a truck.
(see: 3 - OCASIONAL MAINTENANCE).

17 - Hydraulic oil

This indicates that the tank is intended to contain only hydraulic oil.

NOTE: See MAINTENANCE: LUBRICANTS

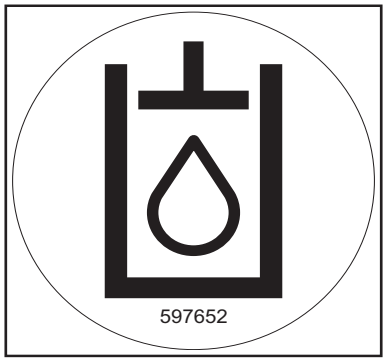

18 - Diesel

This indicates that the tank is intended to contain only vehicle diesel fuel.

19 - Antifreeze

This sticker means that there is antifreeze in the internal combustion engine.
If the antifreeze has properties that are different from the original, the box -30°C or -40°C is checked.

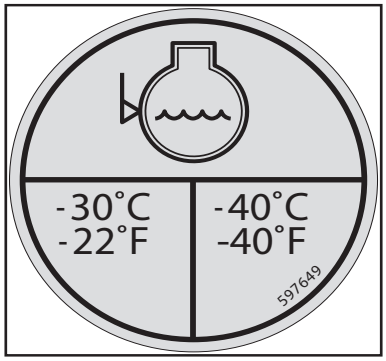

20 - Battery location

This sticker indicates the position of the battery.

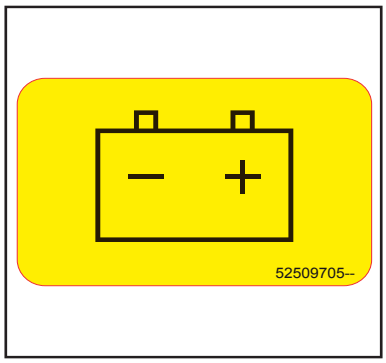

2 - DESCRIPTION

TABLE OF CONTENTS

"EC" DECLARATION OF CONFORMITY - 160 ATJ PLUS EURO 3	2-4
IDENTIFICATION OF THE PLATFORM	2-6
SPECIFICATIONS 160 ATJ PLUS EURO 3	2-8
DIMENSIONS 160 ATJ PLUS EURO 3	2-12
PLATFORM OPERATION	2-14
BASE INSTRUMENTS AND CONTROLS	2-16
BASKET INSTRUMENTS AND CONTROLS	2-18
GROUND-BASED EMERGENCY AND MAINTENANCE STATION	2-20
BASKET CONTROL CONSOLE	2-28
SCREEN DISPLAY - DESCRIPTION OF PAGES	2-36
DEFINITION OF SUB-MENUS	2-38
USE OF THE PLATFORM	2-40
RESCUE PROCEDURE	2-46
OPTIONS	2-51

"EC" DECLARATION OF CONFORMITY - 160 ATJ PLUS EURO 3

1) DÉCLARATION «CE» DE CONFORMITÉ (originale)
« EC» DECLARATION OF CONFORMITY (original)

2) La société, ***The company*** : MANITOU BF

3) Adresse, ***Address*** : 430, rue de l'Aubinière - BP 10249 - 44158 - ANCENIS CEDEX - FRANCE

4) Dossier technique,***Technical file*** : MANITOU BF - 430, rue de l'Aubinière
BP 10249 - 44158 - ANCENIS CEDEX - FRANCE

5) Constructeur de la machine décrite ci-après, ***Manufacturer of the machine described below*** :

160 ATJ PLUS EURO 3

6) Déclare que cette machine, ***Declares that this machine*** :

7) Est conforme aux directives suivantes et à leurs transpositions en droit national, ***Complies with the following directives and their transpositions into national law*** :

2006/42/CE

8) Pour les machines annexe IV , ***For annex IV machines*** :

9) Numéro d'attestation, ***Certificate number*** : 0062 5131 760 01 15 301

10) Organisme notifié, ***Notified body*** : VERITAS
61/71 Boulevard du Château
92 571 NEUILLY SUR SEINE FRANCE

2000/14/CE + 2005/88/CE

11) Numéro d'attestation, ***Certificate number*** :

10) Organisme notifié, ***Notified body*** :

12) Niveau de puissance acoustique, ***Sound power level*** :

13) Mesuré, ***Measured*** : 101 dB (A)

14) Garanti, ***Guaranteed*** : 102 dB (A)

2004/108/CE

11) Numéro d'attestation, ***Certificate number*** :

10) Organisme notifié, ***Notified body*** :

15) Normes harmonisées utilisées, ***Harmonised standards used*** : EN12895

16) Normes ou dispositions techniques utilisées, ***Standards or technical provisions used*** :

17) Fait à, ***Done at*** : Ancenis

18) Date, ***Date*** :

19) Nom du signataire, ***Name of signatory*** : **Fernand MIRA**

20) Fonction, ***Function*** : **Président division MHA**

21) Signature, ***Signature*** :

647121 (20/10/2017)
Mlt+x 735/741/1035 LSU S6-E3

bg : 1) удостоверение за « CE » съответствие (оригинална), 2) Фирмата, 3) Адрес, 4) Техническо досие, 5) Фабрикант на описаната по-долу машина, 6) Обявява, че тази машина, 7) Отговаря на следните директиви и на тяхното съответствие национално право, 8) За машините към допълнение IV, 9)Номер на удостоверението, 10) Наименувана фирма, 15) хармонизирани стандарти използвани, 16) стандарти или технически правила, използвани, 17) Изработено в, 18) Дата, 19) Име на разписалия се, 20) Функция, 21) Функция.

cs : 1) ES prohlášení o shodě (původní), 2) Název společnosti, 3) Adresa, 4) Technická dokumentace, 5) Výrobce níže uvedeného stroje, 6) Prohlašuje, že tento stroj, 7) Je v souladu s následujícími směrnicemi a směrnicemi transponovanými do vnitrostátního práva, 8) Pro stroje v příloze IV, 9) Číslo certifikátu, 10) Notifikační orgán, 15) harmonizované normy použity, 16) Norem a technických pravidel používaných, 17) Místo vydání, 18) Datum vydání, 19) Jméno podepsaného, 20) Funkce, 21) Podpis.

da : 1) EF Overensstemmelseserklæring (original), 2) Firmaet, 3) Adresse, 4) tekniske dossier, 5) Konstruktør af nedenfor beskrevne maskine, 6) Erklærer, at denne maskine, 7) Overholder nedennævnte direktiver og disses gennemførelse til national ret, 8) For maskiner under bilag IV, 9) Certifikat nummer, 10) Bemyndigede organ, 15) harmoniserede standarder, der anvendes, 16) standarder eller tekniske regler, 17) Udfærdiget i, 18) Dato, 19) Underskrivers navn, 20) Funktion, 21) Underskrift.

de : 1) EG-Konformitätserklärung (original), 2) Die Firma, 3) Adresse, 4) Technischen Unterlagen, 5) Hersteller der nachfolgend beschriebenen Maschine, 6) Erklärt, dass diese Maschine, 7) den folgenden Richtlinien und deren Umsetzung in die nationale Gesetzgebung entspricht, 8) Für die Maschinen laut Anhang IV, 9) Bescheinigungsnummer, 10) Benannte Stelle, 15) angewandten harmonisierten Normen, 16) angewandten sonstigen technischen Normen und Spezifikationen, 17) Ausgestellt in, 18) Datum, 19) Name des Unterzeichners, 20) Funktion, 21) Unterschrift.

el : 1) Δήλωση συμμόρφωσης CE (πρωτότυπο), 2) Η εταιρεία, 3) Διεύθυνση, 4) τεχνικό φάκελο, 5) Κατασκευάστρια του εξής περιγραφόμενου μηχανήματος, 6) Δηλώνει ότι αυτό το μηχάνημα, 7) Είναι σύμφωνο με τις εξής οδηγίες και τις προσαρμογές τους στο εθνικό δίκαιο, 8) Για τα μηχανήματα παραρτήματος IV, 9) Αριθμός δήλωσης, 10) Κοινοποιημένος φορέας, 15) εναρμονισμένα πρότυπα που χρησιμοποιούνται, 16) Πρότυπα ή τεχνικούς κανόνες που χρησιμοποιούνται, 16) Είναι σύμφωνο με τα εξής πρότυπα και τεχνικές διατάξεις, 17) Εν, 18) Ημερομηνία, 19) Όνομα του υπογράφοντος, 20) Θέση, 21) Υπογραφή.

es : 1)Declaración DE de conformidad (original), 2) La sociedad, 3) Dirección, 4) expediente técnico, 5) Constructor de la máquina descrita a continuación, 6) Declara que esta máquina, 7) Está conforme a las siguientes directivas y a sus transposiciones en derecho nacional, 8) Para las máquinas anexo IV, 9) Número de certificación, 10) Organismo notificado, 15) normas armonizadas utilizadas, 16) Otras normas o especificaciones técnicas utilizadas, 17) Hecho en, 18) Fecha, 19) Nombre del signatario, 20) Función, 21) Firma.

et : 1) EÜ vastavusdeklaratsioon (algupärane), 2) Äriühing, 3) Aadress, 4) Tehniline dokumentatsioon, 5) Seadme tootja, 6) Kinnitab, et see toode, 7) On vastavuses järgmiste direktiivide ja nende riigisisesesse õigusesse ülevõtmiseks vastuvõetud õigusaktidega, 8) IV lisas loetletud seadmete puhul, 9) Tunnistuse number, 10) Sertifitseerimisasutus, 15) kasutatud ühtlustatud standarditele, 16) Muud standardites või spetsifikatsioonides kasutatakse, 17) Väljaandmise koht, 18) Väljaandmise aeg, 19) Allkirjastaja nimi, 20) Amet, 21) Allkiri.

fi : 1) EY-vaatimustenmukaisuusvakuutus (alkuperäiset), 2) Yritys, 3) Osoite, 4) teknisen eritelmän, 5) Jäljessä kuvatun koneen valmistaja, 6) Vakuuttaa, että tämä kone, 7) Täyttää seuraavien direktiivien sekä niitä vastaavien kansallisten säännösten vaatimukset, 8) Liitteen IV koneiden osalta, 9) Todistuksen numero, 10) Ilmoitettu laitos, 15) yhdenmukaistettuja standardeja käytetään, 16) muita standardeja tai eritelmät, 17) Paikka, 18) Aika, 19) Allekirjoittajan nimi, 20) Toimi, 21) Allekirjoitus.

ga : 1) « EC »dearbhú comhréireachta (bunaidh), 2) An comhlacht, 3) Seoladh, 4) comhad teicniúil, 5) Déantóir an innill a thuairiscítear thíos, 6) Dearbhaíonn sé go bhfuil an t-inneall, 7) Go gcloíonn sé le na treoracha seo a leanas agus a trasuímh isteach i ndlí náisiúnta, 8) Le haghaidh innill an aguisín IV, 9) Uimhir teastais, 10) Comhlacht a chuireadh i bhfios, 15) caighdeáin comhchuibhithe a úsáidtear, 16) caighdeáin eile nó sonraíochtaí teicniúla a úsáidtear, 17) Déanta ag, 18) Dáta, 19) Ainm an tsínitheora, 20) Feidhm, 21) Síniú.

hu : 1) CE megfelelőségi nyilatkozat (eredeti), 2) A vállalat, 3) Cím, 4) műszaki dokumentáció, 5) Az alábbi gép gyártója, 6) Kijelenti, hogy a gép, 7) Megfelel az alábbi irányelveknek valamint azok honosított előírásainak, 8) A IV. melléklet gépeihez, 9) Bizonylati szám, 10) Értesített szervezet, 15) felhasznált harmonizált szabványok, 16) egyéb felhasznált műszaki szabványok és előírások hivatkozásai, 17) Kelt (hely), 18) Dátum, 19) Aláíró neve, 20) Funkció, 21) Aláírás.

is : 1) (Samræmisvottorð ESB (upprunalega), 2) Fyrirtækið, 3) Aðsetur, 4) Tæknilegar skrá, 5) Smiður tækisins sem lýst er hér á eftir, 6) Staðfestir að tækið, 7) Samræmist eftirfarandi stöðlum og staðfærslu þeirra með hliðsjón af þjóðarrétti, 8) Fyrir tækin í aukakafla IV, 9) Staðfestingarnúmer, 10) Tilkynnt til, 15) samhæfða staðla sem notaðir, 16) önnur staðlar eða forskriftir notað, 17) Staður, 18) Dagsetning, 19) Nafn undirritaðs, 20) Staða, 21) Undirskrift.

it : 1) Dichiarazione CE di conformità (originale), 2) La società, 3) Indirizzo, 4) fascicolo tecnico, 5) Costruttore della macchina descritta di seguito, 6) Dichiara che questa macchina, 7) È conforme alle direttive seguenti e alle relative trasposizioni nel diritto nazionale, 8) Per le macchine Allegato IV, 9) Numero di Attestazione, 10) Organismo notificato, 15) norme armonizzate applicate, 16) altre norme e specifiche tecniche applicate, 17) Stabilita a, 18) Data, 19) Nome del firmatario, 20) Funzione, 21) Firma.

lt : 1) CE atitikties deklaracija (originalas), 2) Bendrovė, 3) Adresas, 4) Techninė byla, 5) Žemiau nurodytas įrenginio gamintojas, 6) Pareiškia, kad šis įrenginys, 7) Atitinka toliau nurodytas direktyvas ir į nacionalinius teisės aktus perkeltas jų nuostatas, 8) IV priedas dėl mašinų, 9) Sertifikato Nr, 10) Paskelbtoji įstaiga, 15) suderintus standartus naudojamus, 16) Kiti standartai ir technines specifikacijas, 17) Pasirašyta, 18) Data, 19) Pasirašiusio asmens vardas ir pavardė, 20) Pareigos, 21) Parašas.

lv : 1) EK atbilstības deklarācija (oriģināls), 2) Uzņēmums, 3) Adrese, 4) tehniskās lietas, 5) Tālāk aprakstītās iekārtas ražotājs, 6) Apliecina, ka šī iekārta, 7) Ir atbilstoša tālāk norādītajām direktīvām un to transpozīcijai nacionālajā likumdošanā, 8) Iekārtām IV pielikumā, 9) Apliecības numurs, 10) Reģistrētā organizācija, 15) lietotajiem saskaņotajiem standartiem, 16) lietotajiem tehniskajiem standartiem un specifikācijām, 17) Sastādīts, 18) Datums, 19) Parakstītāja vārds, 20) Amats, 21) Paraksts.

mt : 1) Dikjarazzjoni ta' Konformità KE (oriġinali), 2) Il-kumpanija, 3) Indirizz, 4) fajl tekniku, 5) Manifattriċi tal-magna deskritta hawn isfel, 6) Tiddikjara li din il-magna, 7) Hija konformi hija konformi mad-Direttivi segwenti u l-liġijiet li jimplimentawhom fil-liġi nazzjonali, 8) Għall-magni fl-Anness IV, 9) Numru taċ-ċertifikat, 10) Entità nnotifikata, 15) l-istandards armonizzati użati, 16) standards tekniċi u speċifikazzjonijiet oħra użati, 17) Magħmul f', 18) Data, 19) Isem il-firmatarju, 20) Kariga, 21) Firma.

nl : 1) EG-verklaring van overeenstemming (oorspronkelijke), 2) Het bedrijf, 3) Adres, 4) technisch dossier, 5) Constructeur van de hierna genoemde machine, 6) Verklaart dat deze machine, 7) In overeenstemming is met de volgende richtlijnen en hun omzettingen in het nationale recht, 8) Voor machines van bijlage IV, 9) Goedkeuringsnummer, 10) Aangezegde instelling, 15) gehanteerde geharmoniseerde normen, 16) andere gehanteerde technische normen en specificaties, 17) Opgemaakt te, 18) Datum, 19) Naam van ondergetekende, 20) Functie, 21) Handtekening.

no : 1) CE-samsvarserklæring (original), 2) Selskapet, 3) Adresse, 4) tekniske arkiv, 5) Fabrikant av følgende maskin, 6) Erklærer at denne maskinen, 7) Oppfyller kravene i følgende direktiver, med nasjonale gjennomføringsbestemmelser, 8) For maskinene i tillegg IV, 9) Attestnummer, 10) Notifisert organ, 15) harmoniserte standarder som brukes, 16) Andre standarder og spesifikasjoner brukt, 17) Utstedt i, 18) Dato, 19) Underskriverens navn, 20) Stilling, 21) Underskrift.

pl : 1) Deklaracja zgodności CE (oryginalne), 2) Spółka, 3) Adres, 4) dokumentacji technicznej, 5) Wykonawca maszyny opisanej poniżej, 6) Oświadcza, że ta maszyna, 7) Jest zgodna z następującymi dyrektywami i odpowiadającymi przepisami prawa krajowego, 8) Dla maszyn załącznik IV, 9) Numer certyfikatu, 10) Jednostka certyfikująca, 15) zastosowanych norm zharmonizowanych, 16) innych zastosowanych norm technicznych i specyfikacji, 17) Sporządzono w, 18) Data, 19) Nazwisko podpisującego, 20) Stanowisko, 21) Podpis.

pt : 1) Declaração de conformidade CE (original), 2) A empresa, 3) Morada, 4) processo técnico, 5) Fabricante da máquina descrita abaixo, 6) Declara que esta máquina, 7) Está em conformidade às directivas seguintes e às suas transposições para o direito nacional, 8) Para as máquinas no anexo IV, 9) Número de certificado, 10) Entidade notificada, 15) normas harmonizadas utilizadas, 16) outras normas e especificações técnicas utilizadas, 17) Elaborado em, 18) Data, 19) Nome do signatário, 20) Cargo, 21) Assinatura.

ro : 1) Declaraţie de conformitate CE (originală), 2) Societatea, 3) Adresa, 4) cărtii tehnice, 5) Constructor al maşinii descrise mai jos, 6) Declară că prezenta maşină, 7) Este conformă cu directivele următoare şi cu transpunerea lor în dreptul naţional, 8) Pentru maşinile din anexa IV, 9) Număr de atestare, 10) Organism notificat, 15) standardele armonizate utilizate, 16) alte standarde si specificatii tehnice utilizate, 17) Întocmit la, 18) Data, 19) Numele persoanei care semnează, 20) Funcţia, 21) Semnătura.

sk : 1) ES vyhlásenie o zhode (pôvodný), 2) Názov spoločnosti, 3) Adresa, 4) technickej dokumentácie, 5) Výrobca nižšie opísaného stroja, 6) Vyhlasuje, že tento stroj, 7) Je v súlade s nasledujúcimi smernicami a smernicami transponovanými do vnútroštátneho práva, 8) Pre stroje v prílohe IV, 9) Číslo certifikátu, 10) Notifikačný orgán, 15) použité harmonizované normy, 16) použité iné technické normy a predpisy, 17) Miesto vydania, 18) Dátum vydania, 19) Meno podpisujúceho, 20) Funkcia, 21) Podpis.

sl : 1) ES Izjava o ustreznosti (izvirna), 2) Družba. 3) Naslov. 4) tehnične dokumentacije, 5) Proizvajalac tukaj opisanega stroja, 6) Izjavlja, da je ta stroj, 7) Ustreza naslednjim direktivam in njihovi transpoziciji v državno pravo, 8) Za stroje priloga IV, 9) Številka potrdila, 10) Obvestilo organu, 15) uporabljene harmonizirane standarde, 16) druge uporabljene tehnične standarde in zahteve, 17) V, 18) Datum, 19) Ime podpisnika, 20) Funkcija, 21) Podpis.

sv : 1) CE-försäkran om överensstämmelse (original), 2) Företaget, 3) Adress, 4) tekniska dokumentationen, 5) Konstruktör av nedan beskrivna maskin, 6) Försäkrar att denna maskin, 7) Överensstämmer med nedanstående direktiv och införlivandet av dem i nationell rätt, 8) För maskinerna i bilaga IV, 9) Nummer för godkännande, 10) Organism som underrättats, 15) Harmoniserade standarder som använts, 16) andra tekniska standarder och specifikationer som använts, 17) Upprättat i, 18) Datum, 19) Namn på den som undertecknat, 20) Befattning, 21) Namnteckning.

647121 (20/10/2017)
MH-x 735/741/1035 LSU S6-E3

IDENTIFICATION OF THE PLATFORM

- In view of our policy of constantly improving our products, we may make certain modifications to our access platform range without notifying our customers in advance.

- When you order parts, or when you require any technical information, always specify:

  NOTE: For the owner's convenience, it is recommended that a note of these numbers is made in the spaces provided, at the time of the delivery of the access platform.

ACCESS PLATFORM MANUFACTURER'S PLATE (FIG. A)

- Type:
- Serial no.:
- Year of manufacture:

A

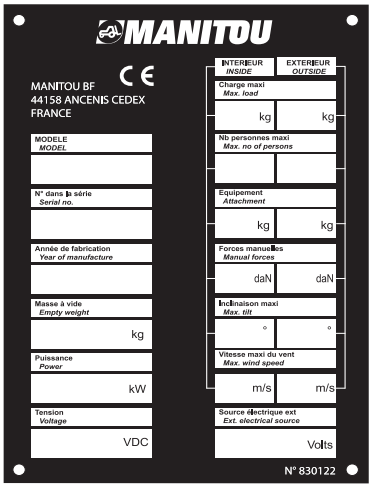

LOCATION OF THE MANUFACTURER'S PLATE (FIG. B)

The manufacturer's plate is fastened on the front right of the chassis.

B

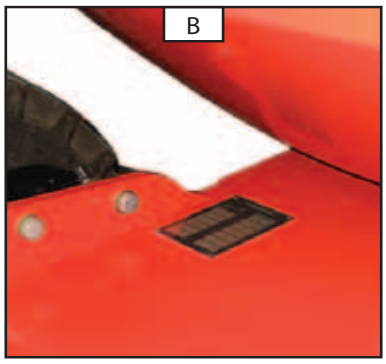

I.C. ENGINE (FIG. C - ITEM C1)

- Engine No.

C

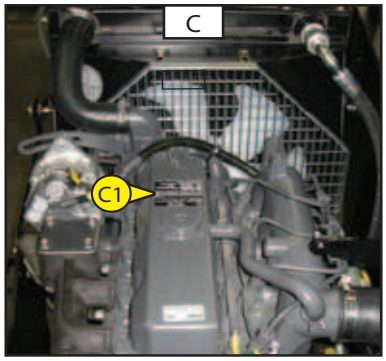

647121 (20/10/2017)
MLt-x 735/741/1035 LSU S6-E3

Hydrostatic pump (fig. D)

- Pump No.
- Type of codification
- Manufacturer's No.
- Year of manufacture

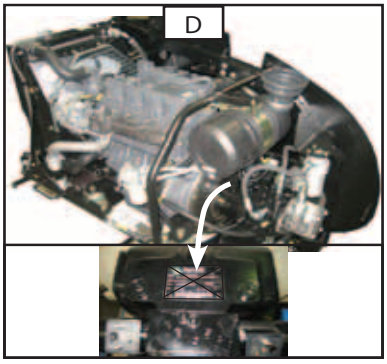

Front axle (fig. E)

- Axle type
- Serial No.
- Manufacturer's No.

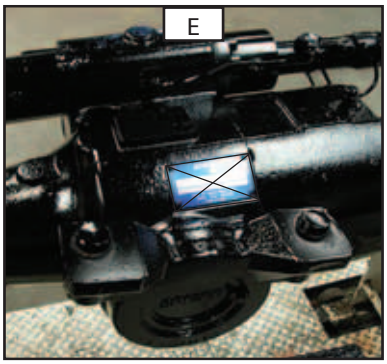

Rear axle (fig. F)

- Axle type
- Serial No.
- Manufacturer's No.

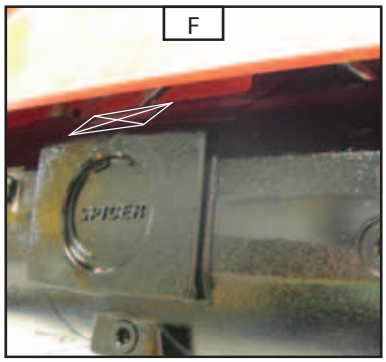

Connection box fuses

- F1	250 A
- F2	250 A

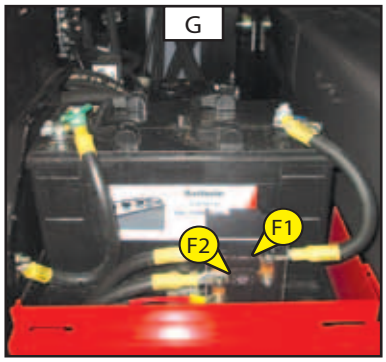

SPECIFICATIONS 160 ATJ PLUS EURO 3

LOAD SPECIFICATIONS	UNIT	160 ATJ PLUS	160 ATJ PLUS RC	TOL ±
Platform				
Rated capacity for outdoor use (Wind 45 km/h)	kg	400	400	-
Number of people in basket	-	3	3	-
Unladen platform weight	kg	8,100	8,100	20
Authorised maximum tilt	° / %	5 / 9	5 / 9	0.1
Gradeability	%	40	40	2
Working speed	Km/h	0.8		0.1
Transport speed (1) tortoise	Km/h	2.5		0.2
Transport speed (2) ramp	Km/h	2.5		0.2
Transport speed (3) hare	Km/h	6		0.2
Maximum authorised horizontal manual force	N	400		-
Wheels				
Load on front wheel (transport position)	kg	1 940		5
Load on rear wheel (transport position)	kg	2 110		5
Maximum wheel load	kg	4,897.7		5
Bearing surface on ground (hard/soft)	cm^2	450 / 1,045		3
Ground bearing pressure (hard / loose)	daN/cm^2	10.88 / 4.69		

HYDRAULIC MOVEMENT (basket control)	UNIT	160 ATJ PLUS	160 ATJ PLUS RC	TOL ±
Arm movement 1/2				
Unladen / laden lifting	s	22 / 22		1
Unladen / laden lowering	s	30 / 30		1
Arm movement 3 (telescope extended)				
Unladen / laden lifting	s	32 / 32		1
Unladen / laden lowering	s	28 / 28		1
Arm movement 3 (telescope retracted)				
Unladen / laden lifting	s	-		1
Unladen / laden lowering	s	-		1
Telescope movement				
Extended unladen / laden	s	13 / 13		1
Retracted unladen / laden	s	13 / 13		1
Jib movement				
Extended unladen / laden	s	20 / 20		1
Retracted unladen / laden	s	18 / 18		1
Turntable rotation movement (Telescope extended)				
Rotation 350°, telescope extended	s	108		1
Basket rotation movement				
180° rotation	s	10		2

647121 (20/10/2017)
MH-x 735/741/1035 LSU S6-E3

DIMENSIONS	UNIT	160 ATJ PLUS	160 ATJ PLUS RC	TOL ±
Transport position				
Width	mm	2 300		1%
Length	mm	6 925		1%
Length (truck transport)	mm	4 820		1%
Height	mm	2 750		1%
Floor/ground height, in transport	mm	440		1%
Turntable overrun	mm	231		1%
Working position				
Working height	mm	16 210		1%
Floor height	mm	14 210		1%
Max. outreach outside basket	mm	8 440		1%
Overhang	mm	7 000		1%
Ground clearance under chassis	mm	425		2%
Ground clearance under axle	mm	325		2%
Max. clearance angle under chassis	%	-		2%
Radius of gyration 2 wheels INT/EXT (measured)		1 325		3%
Radius of gyration 4 wheels INT/EXT (measured)		3 665		3%
Basket				
External dimensions		2,300 x 930		1%
Floor area		2,226 x 826		1%

CAPACITY	UNIT	160 ATJ PLUS	160 ATJ PLUS RC	TOL ±
Hydraulic oil tank	l	54		2
Fuel tank	l	52		2
Engine oil sump	l	9.5		2
Cooling circuit	l	8		2

STANDARD EQUIPMENT	UNIT	160 ATJ PLUS	160 ATJ PLUS RC	TOL ±
Hour meter		YES		-
230 V provision		YES		-
Proportional diesel level display		YES		-
Fuel/battery low level alarm		YES		-
Dead man pedal		YES		-
Basket tool box		YES		-
User interface (diagnostic aid)		YES		-
Oscillating axle		YES		-

OPTIONS	UNIT	160 ATJ PLUS	160 ATJ PLUS RC	TOL ±
All movements beep		YES		-
Flashing lights/Rotating beacon light		YES		-

Engine	UNIT	160 ATJ PLUS	160 ATJ PLUS RC	TOL ±
Type		KUBOTA V2403-M		-
Fuel		DIESEL		-
Number of cylinders		4		-
Cubic capacity	cm^3	2 434		-
Idling speed unladen	rpm	1 250		0/+50
Full speed unladen	rpm	2 500		20
Power ISO/TR (at 2400 rpm)	HP/KW	46 - 34.1		-
Max torque (at 1800 rpm)	Nm	162.5		-
Fuel consumption in 1 hr	l/h	-		
Nb. of cycles/test fuel consumption	nb. cycles/hr	-		
Weight unladen	kg	184		5
Air cleaner	µm	-		-
Type of cooling		AIR		-
Fan		SUCTION		-
Noise level LwA	dBA	100		-

TRANSMISSION	UNIT	160 ATJ PLUS	160 ATJ PLUS RC	TOL ±
Type		HYDRAULICS		
Supplier		BOSCH-REXROTH		
Capacity (hydraulic transmission)	cm^3	80		
Power (Electric transmission)	kW	-		
Pulling force	daNm	-		
Reduction ratio		-		
Number of front / rear steerable wheels		2 / 2	2 / 2	
Number of front / rear drive wheels		2 / 2	2 / 2	
Front Axle / Wheel				
Differential		45% limited slip		
Tyre		12.5-18 MPT SL R4 DN 8T		-
Supplier		SOLIDEAL		
Radius under load, transport position	mm	455	455	
Inflation / Pressure	bar	FOAM	FOAM	0.2
Rear Axle / Wheel				
Differential		Hydraulic locking 100%		
Tyre		12.5-18 MPT SL R4 DN 8T		
Supplier		SOLIDEAL		
Radius under load, transport position	mm	455	455	
Inflation / Pressure	bar	FOAM	FOAM	0.2

BRAKE SYSTEM (Parking brake)	UNIT	160 ATJ PLUS	160 ATJ PLUS RC	TOL ±
Type of brake		NEGATIVE		-
Type of control		HYDRAULICS		-
Braked wheels		2 REAR WHEELS		-
Release (freewheel mode)		MANUAL ON AXLE		-
Braking torque	daNm	1,600 on wheel		5

VIBRATION LEVEL	UNIT	160 ATJ PLUS	160 ATJ PLUS RC	TOL ±
Average quadratic values for the body:	m/s^2	<0.5	<0.5	

HYDRAULIC CIRCUIT	UNIT	160 ATJ PLUS	160 ATJ PLUS RC	TOL ±
Main hydraulic pump				
Type		Variable capacity BOSCH A 10VG 45		-
Cubic capacity	cm^3	45		-
Flow rate at nominal rpm, unladen	l/mn	58		-
Flow rate at max. rpm, unladen	l/mn	115		-
Maximum continuous service pressure	bar	300		5
Auxiliary hydraulic pump				
Type		Fixed capacity BOSCH		-
Cubic capacity	cm^3	19.5		-
Flow rate at nominal rpm, unladen	l/mn	-		
Flow rate at max. rpm, unladen	l/mn	47.5		-
Maximum continuous service pressure	bar	210		5
Filtration				
Return	µm	-		-
Suction	µm	100 (ß10)		-
Pressure	µm	-		-

ELECTRIC CIRCUIT	UNIT	160 ATJ PLUS	160 ATJ PLUS RC	TOL ±
Battery				
Supplier (Original equipment)		EXIDE		
Capacity C5	Ah	110		-
Capacity C20	Ah	-		
Rated voltage	V	12		-
Type		STARTING		-
Alternator				
Type				-
current	A	60		-
Voltage	V	12		-

BACKUP PUMP	UNIT	160 ATJ PLUS	160 ATJ PLUS RC	TOL ±
Type		ELECTRICAL		-
Cubic capacity	cm^3	2.0		-
Power	kW	1.3		-
Voltage	V	12		-
Pressure 150 bars	A	-		-
S2	mn	6.2 at 100 b		-
S3	%	10.3 at 100 b		-

647121 (20/10/2017)
Mlt-x 735/741/1035 LSU S6-E3

DIMENSIONS 160 ATJ PLUS EURO 3

A	6929
A1	4938
B	2200
C	2370
C1	2705
D	2300
E	425
F	325
G	1325
H	3680
I	4040
J	6322
K	2742
G1	3160
G2	4050
G3	8450
G4	7574
H1	14200
H2	12790
H3	7150
H4	321

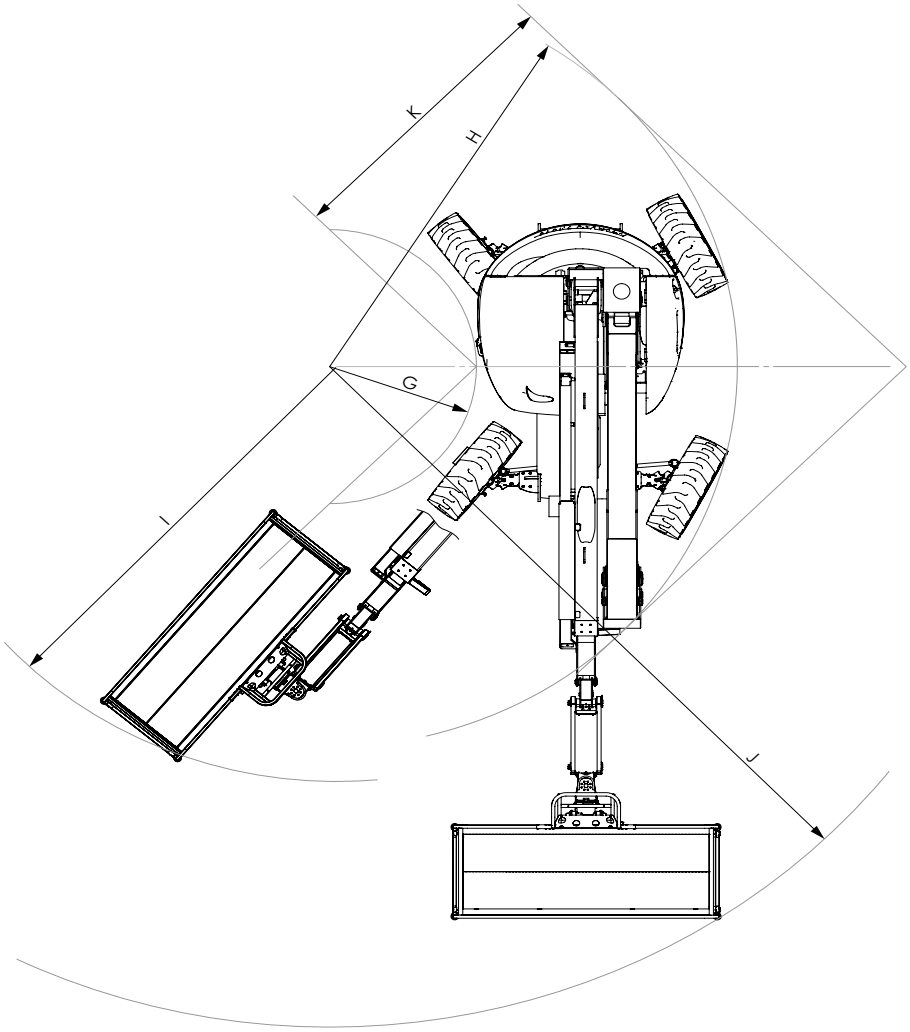

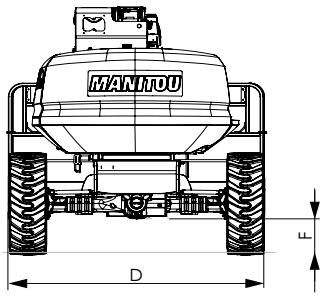

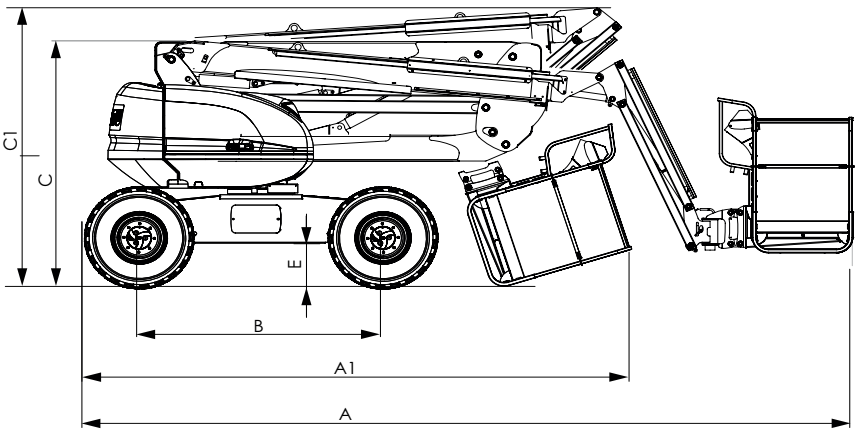

647121 (20/10/2017)
MLt-x 735/741/1035 LSU S6-E3

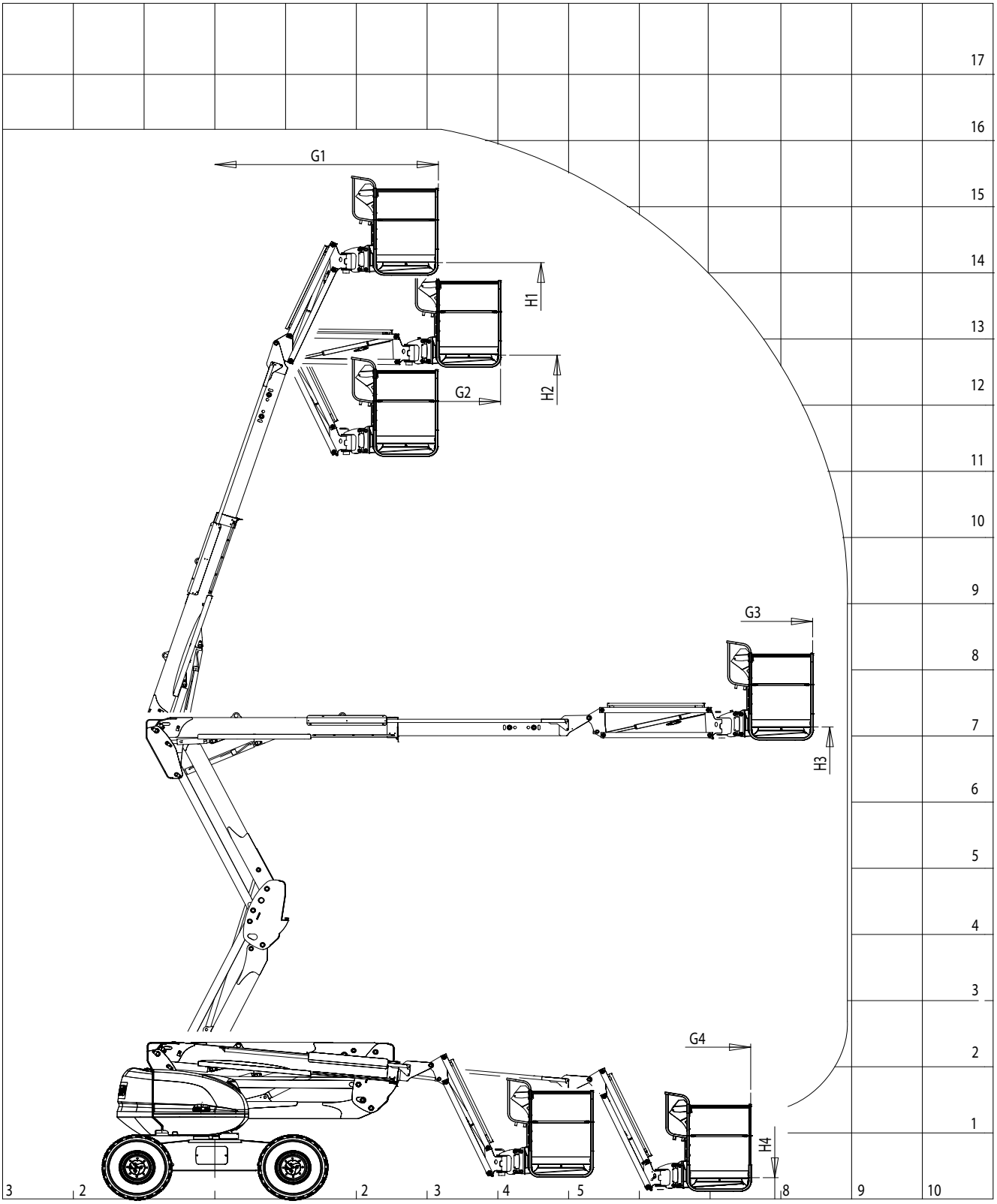

647121 (20/10/2017)
MHtx 735/741/1035 LSU S6-E3

PLATFORM OPERATION

DESCRIPTION

- This machine is a mobile personnel lifting platform. It consists of an operating platform fixed on the end of a jib, itself fixed on the end of a telescopic arm, the whole mounted on a hinged arm structure.

- MANITOU lifting platforms are intended solely to be used for lifting people, and their tools and supplies (within authorised weight limits: see the SPECIFICATIONS paragraph) to the desired operating height to reach hard-to-reach places above installations and buildings.

- The platform has a basket control station. From this control station, the operator can drive and operate the machine forwards or backwards. The operator can lift or lower all of the arms, extend or retract the telescopic arm or rotate the turntable or the basket to the right or left. The basket, arm and turntable assembly can rotate continuously to the right and to the left.
  The basket, arm and turntable assembly can rotate a total of 359 degrees, not continuously, to the right and to the left in relation to its retracted position.

- The platform also has a ground emergency and maintenance console from which all the lifting controls can be executed, with the exception of translation. The base controls should only be used in an emergency to return the operator to the ground if he is unable to do so himself.

- The operator must make a daily inspection to ensure that the ground emergency and maintenance control console and then the basket console are operating correctly.

Specifications, safety and rescue procedure stickers are affixed to the machine. The operator must familiarise himself with them and understand their content. To avoid incorrect interpretation of the pictograms, refer to the "SAFETY STICKERS" paragraph in chapter 1 - OPERATING AND SAFETY INSTRUCTIONS.

- The lifting platform's movements are provided by a hydraulic pump actuated by the engine. The hydraulic components are controlled by solenoid valves actuated by switches and the control joystick.

- The controls on the base and/or basket console, consisting of rocker switches, are either in On or Off mode.

- **The base console has a "Dead Man" push button (8*). This must be held in base position at the same time as a base control is pressed. Releasing it stops the movement.**

- The lifting platform is a machine with four drive wheels driven by an I.C. engine. The drive wheels have spring brakes with hydraulic release. These brakes are applied automatically when the translation joystick is set to the neutral position.

- The lifting platform can lift to the limit of its capacities (see "SPECIFICATIONS" in this chapter). A load of up to the maximum capacity in the basket will enable you to work in any position, provided the machine is not on an incline greater than the maximum authorised tilt.

GENERAL

- The following pages give all the necessary information for use of the machine, including the procedures for using, driving, parking, loading and transporting the platform.

647121 (20/10/2017)
MHx735/741/1035 LSU S6-E3

SAFETY

TILT

If the platform reaches the maximum authorised tilt (see SPECIFICATIONS chapter), the LED 34* on the basket console flashes steadily. The vibrating buzzer 41* in the basket also sounds intermittently.
All the "AGGRAVATING" movements of raising the arms and extending the telescope are forbidden as a safety measure.

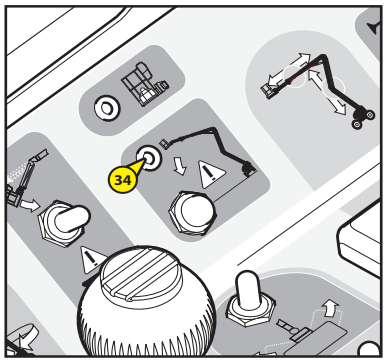

To resume control, perform only de-aggravating movements:
- return to a safe position by retracting the telescope and lowering the arms, then reposition the access platform on more level ground in order to perform lifting or extension operations.

FRONT AXLE OSCILLATION CYLINDER BLOCKAGE FAULT

If the system detects a front axle oscillation cylinder closure fault, the LED 34* on the basket console flashes rapidly and the vibrating buzzer is activated at a rapid frequency.
All the "AGGRAVATING" arm lifting and telescope extension movements are forbidden as a safety measure.

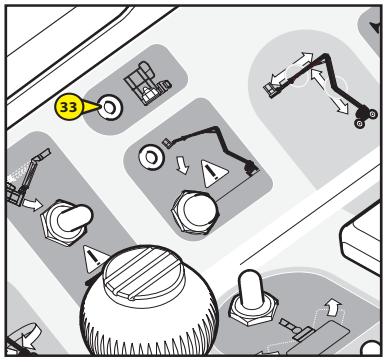

To recover control, perform only de-aggravating movements:
- return to a safe position by retracting the telescope and lowering the arms.
- to recover the lifting movements when the platform has returned to its transport position, confirm cancellation of the fault on the base screen by pressing "OK" 7c*.

If this fault persists, consult your dealer.

OVERLOAD

When the platform has reached the authorised weight limit (see SPECIFICATIONS chapter) in the basket, the LED 33* on the basket console flashes steadily. The vibrating buzzer 41* in the basket also sounds intermittently. All movements are forbidden as a safety measure.

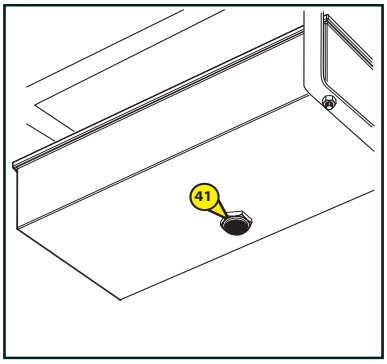

To recover control:
- relieve the weight on the basket by removing the item(s) causing the overload,
OR,
- ask someone on the ground to bring the basket down under manual control (see the "Rescue procedure" paragraph in chapter 2 and "Safety stickers" in chapter 1).

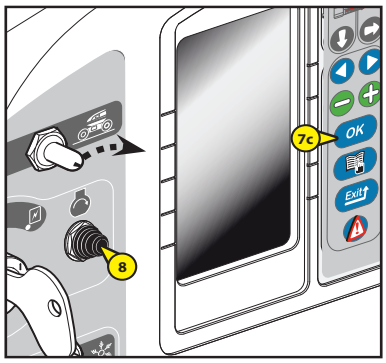

*: the above markings also match those used in the descriptions of these components in the following pages.

BASE INSTRUMENTS AND CONTROLS

A - GROUND EMERGENCY AND MAINTENANCE CONSOLE

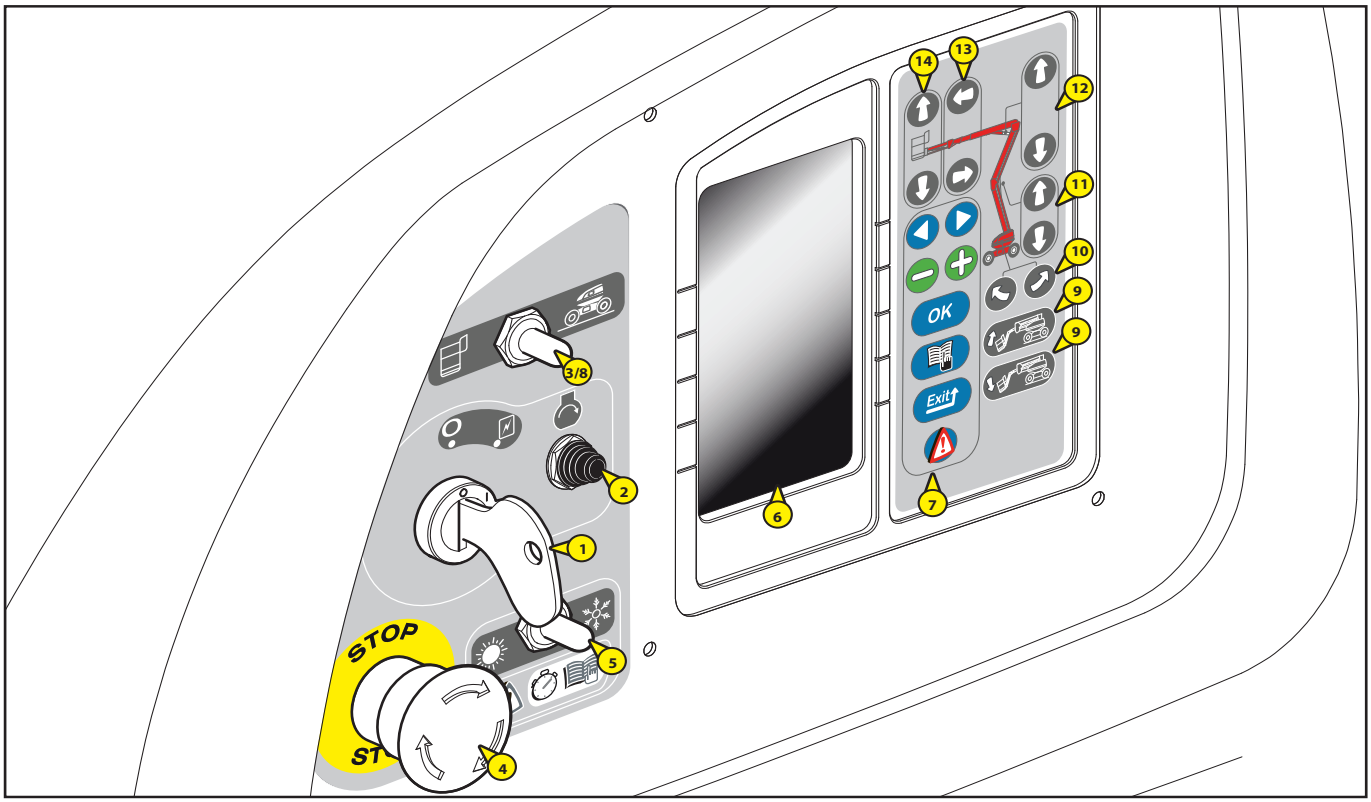

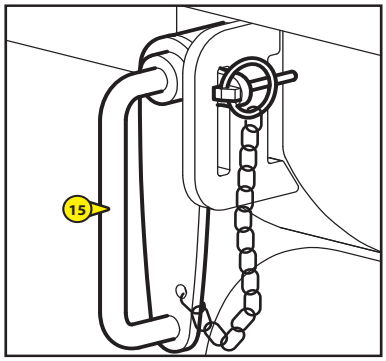

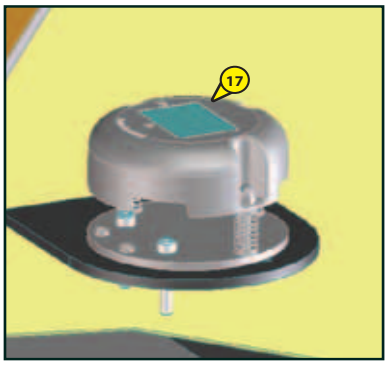

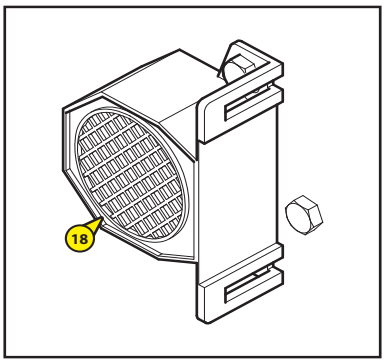

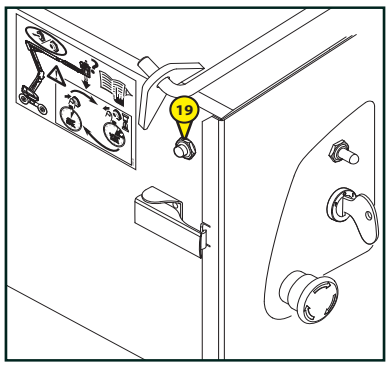

A - GROUND EMERGENCY AND MAINTENANCE CONSOLE

1 - IGNITION SWITCH

2 - START BUTTON

3 - GROUND OR PLATFORM CONTROL SELECTOR SWITCH

4 - EMERGENCY STOP

5 - ENGINE LOW-TEMPERATURE START AID

6 - INTERFACE SCREEN

7 - SCREEN DATA VALIDATION KEYS

8 - DEAD MAN KEY

9 - KEY FOR TILTING THE BASKET UP AND DOWN

10 - TURNTABLE ROTATION KEYS

11 - KEYS FOR LIFTING AND LOWERING LOWER ARMS

12 - KEYS FOR LIFTING AND LOWERING UPPER ARM

13 - TELESCOPE EXTENSION/RETRACTION KEYS

14 - JIB LIFTING AND LOWERING KEYS

15 - TURNTABLE ROTATION LOCKING SYSTEM

16 - ROTATING BEACON LIGHT

17 - TILT SENSOR

18 - HORN

19 - BASE BACKUP PUMP BUTTON

BASKET INSTRUMENTS AND CONTROLS

B - BASKET COMMAND AND CONTROL STATION

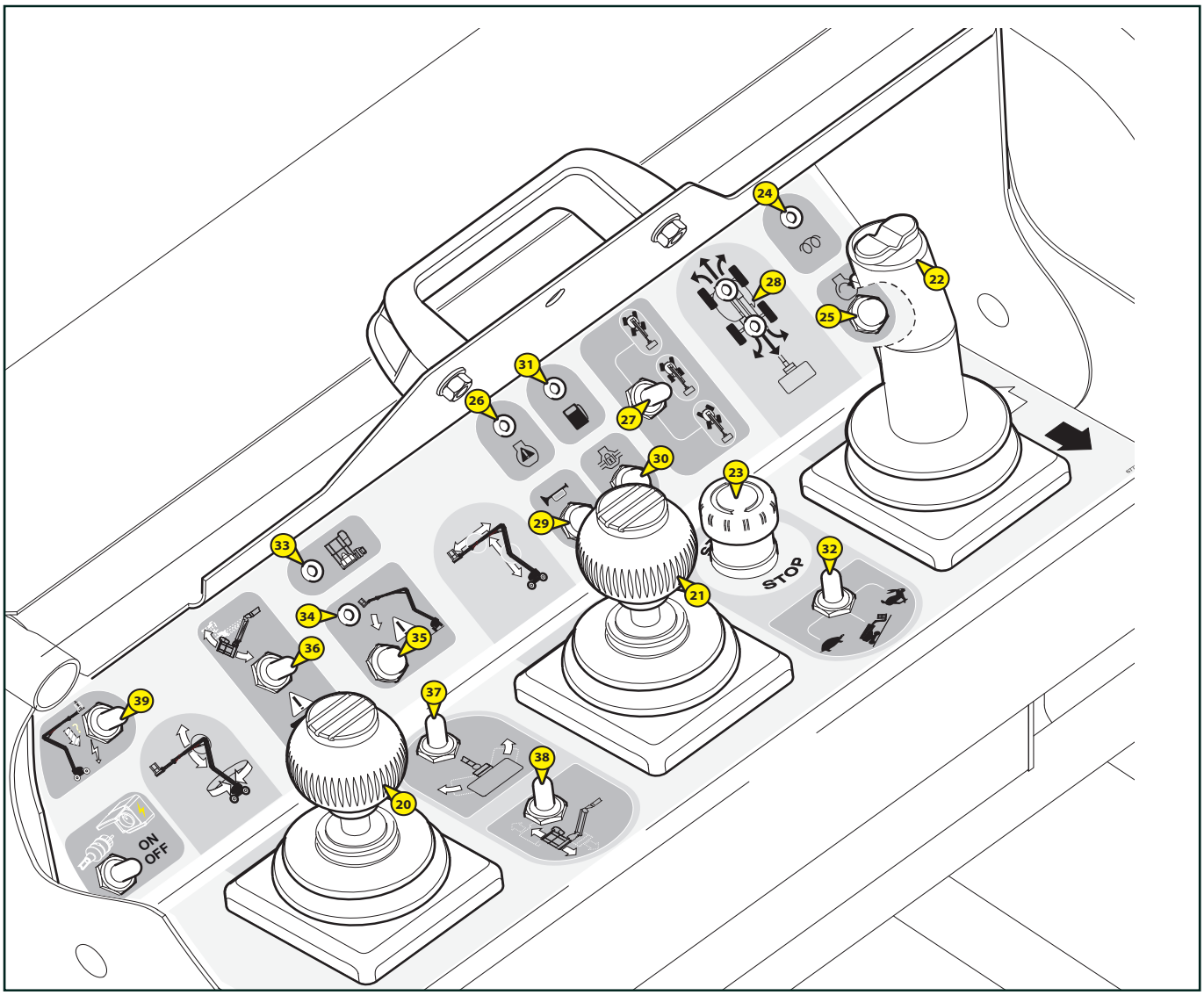

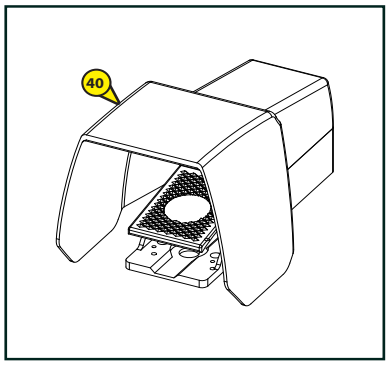

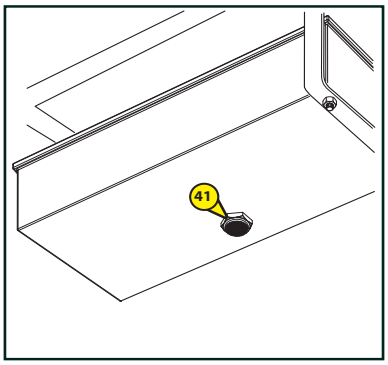

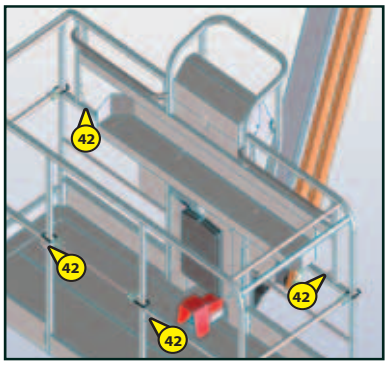

B - BASKET COMMAND AND CONTROL STATION

20 - UPPER ARM LIFTING AND LOWERING AND TURNTABLE ROTATION CONTROL LEVER

21 - LOWER ARM LIFTING AND LOWERING AND TELESCOPE EXTENSION AND RETRACTION CONTROL LEVER

22 - PLATFORM FORWARD/REVERSE AND RIGHT/LEFT JOYSTICK

23 - EMERGENCY STOP

24 - "PRE-HEATING" INDICATOR LIGHT

25 - START CONTROL BUTTON

26 - "ENGINE FAULT" INDICATOR LIGHT

27 - STEERING MODE SELECTOR

28 - AXLE ALIGNMENT LEDS

29 - HORN CONTROL BUTTON

30 - DIFFERENTIAL LOCK CONTROL BUTTON

31 - LOW FUEL LEVEL INDICATOR

32 - TRAVEL SPEED SELECTION SWITCH

33 - OVERLOAD INDICATOR LIGHT

34 - TILT INDICATOR LIGHT

35 - "USE ON SLOPE" BUTTON

36 - BASKET TILT SWITCH

37 - BASKET ROTATION SWITCH

38 - BASKET JIB SWITCH

39 - BASKET BACKUP PUMP BUTTON

40 - "DEAD MAN" PEDAL

41 - VIBRATING BUZZER UNDER BASKET CONSOLE

42 - SAFETY HARNESS ATTACHMENT POINTS

NOTE: The terms RIGHT-LEFT-FRONT-REAR are understood to be for an operator looking forwards from the platform while it is in transport position.

GROUND-BASED EMERGENCY AND MAINTENANCE STATION

1 - IGNITION SWITCH

This ignition switch has two positions.

POSITION A
- Engine switched off and power turned off.

POSITION B
- Power turned on and engine preheated automatically.

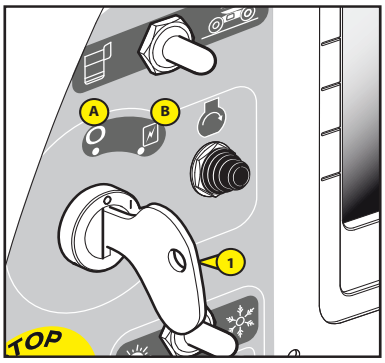

2 - START BUTTON

BUTTON 2
- Starting the engine.

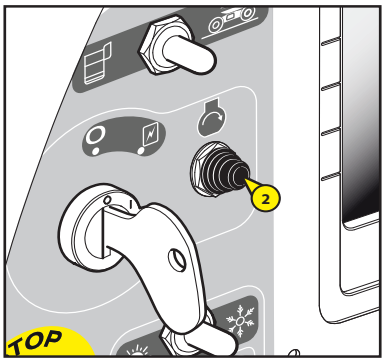

3 - GROUND OR PLATFORM CONTROL SELECTOR SWITCH

This switch has two positions:

POSITION A
- The controls are operated from inside the platform.

POSITION B
- The controls are operated from the ground (base control). The button should be held in position B (dead man) to supply power to the base control. Releasing it does not enable the movements to be activated.

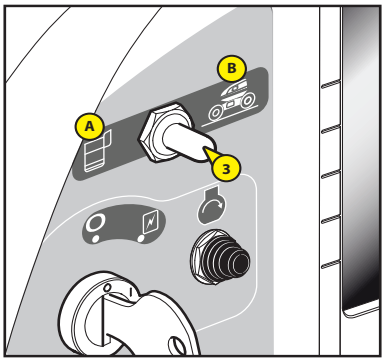

4 - Emergency stop

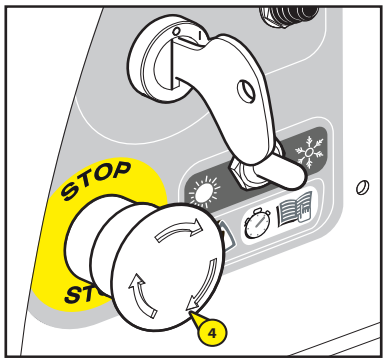

This red mushroom-head circuit breaker enables you to cut off all the machine's movements in the event of an anomaly or danger arising.

- Press the knob to cut off the movements.
- Turn the knob a quarter of a turn to the right to restore the power supply (the switch returns automatically to its initial position).

In all cases this control takes priority, even if the movements are executed from the basket control console.

When the Emergency Stop is activated, the movements can stop very abruptly.

Do not use the emergency stop button to simply stop the access platform, otherwise reset it as quickly as possible as no action can be carried out on the ground control console or the basket control console.

5 - Engine start aid selector

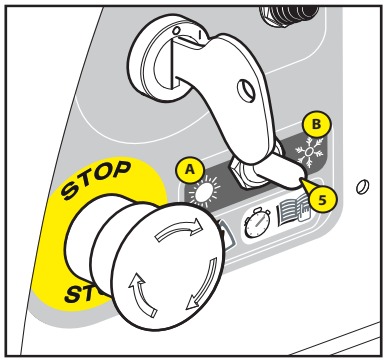

This selector has two positions to choose from depending on the temperature of the ambient air.

A: SUN POSITION
- Temperature above -10°C engine starts at idling speed.

B: SNOW POSITION
- If the temperature is below around -10°C, put the selector in this position before starting: the engine will be kept at top speed (only for the first start of the day).
- Leave the engine at this speed for 30 to 60 seconds, depending on the temperature. (During this time, no movements are possible.)
- Move the selector from SNOW position to SUN position, idling speed (normal position, engine warm).

6 - Interface screen

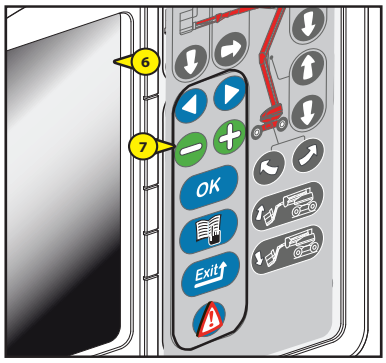

- This screen displays all the start-up, configuration, maintenance and fault stages of the platform.
- NOTE: The current system time is displayed at the top of each page.

7 - Screen data validation keys

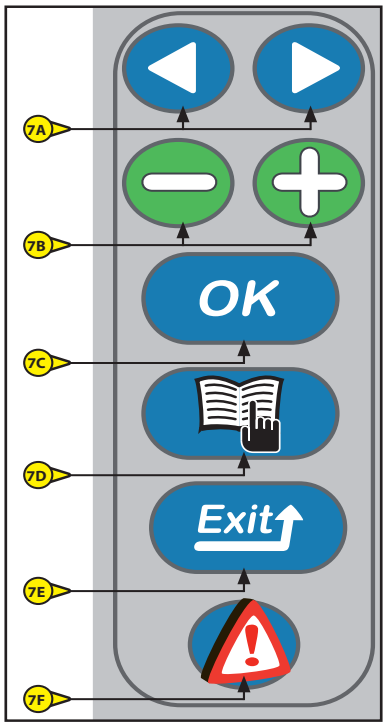

- These keys are used to validate the different information on the screens.

KEYPAD FUNCTIONS:

7A: Keys for selecting options on the menu pages.

7B: Keys for selecting options on the sub-menu pages.

7C: This "OK" key has two functions:
"Validation" key for selections made using the minus and plus keys,
Key for clearing faults (the fault has been seen; this key clears it from the screen but does not resolve it).

7D: This "Menu" key has two functions:
Opens the "Access Code" page.
Enter the code to get to the required menu (this code will be saved as long as the platform is powered on).
Exits and returns to the work screen page.

7E: This "Exit" key has two functions:
Cancellation of a current validation.
Returns to the previous level in a menu.

7F: This "Fault" key displays the faults saved on the platform.

647121 (20/10/2017)
Mlt-x 735/741/1035 LSU S6-E3

8 - "Dead Man" function

- The button needs to be held in dead man position (position B) to supply power to the base control, at the same time as the lifting or rotating function keys.

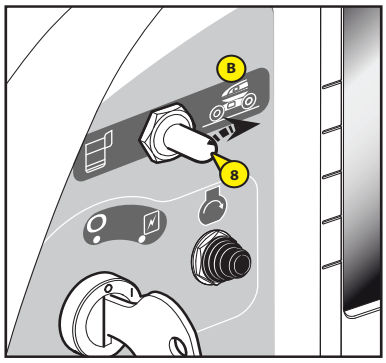

9 - Key for tilting the basket up and down

These keys, used simultaneously with the button 8 in dead man position, control the horizontality correction of the basket or the complete folding of the basket in transport position.

9A: TILTING THE BASKET DOWN
- Hold the dead man key 8 and press key 9A.

9B: TILTING THE BASKET UP
- Hold the dead man key 8 and press on key 9B.

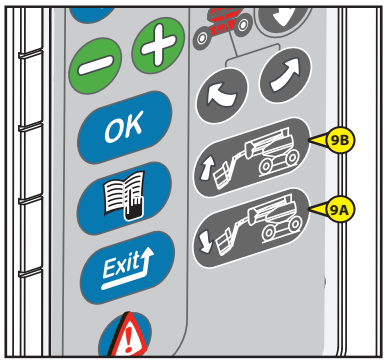

10 - Turntable rotation keys

These keys, used simultaneously with the button 8 in dead man position, rotate the turntable.

10A: TURNTABLE ROTATION TO THE LEFT
- Hold the dead man key 8 and press key 10A.

10B: TURNTABLE ROTATION TO THE RIGHT
- Hold the dead man key 8 and press on key 10B.

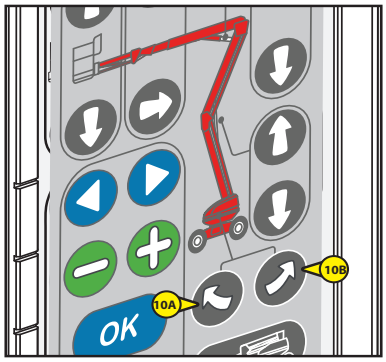

11 - Keys for lifting and lowering lower arms

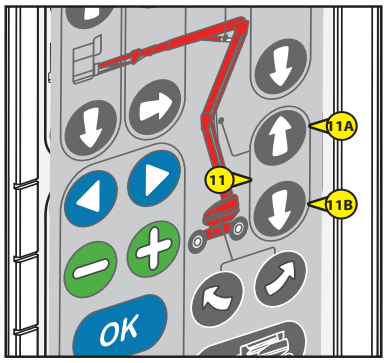

- These keys, used simultaneously with the button 8 in dead man position, lift and lower the lower arms.

A: LIFTING THE LOWER ARMS
- Hold the dead man function 8 and press key 11A.

B: LOWERING THE LOWER ARMS
- Hold the dead man function 8 and press on key 11B.

12 - Keys for lifting and lowering upper arm

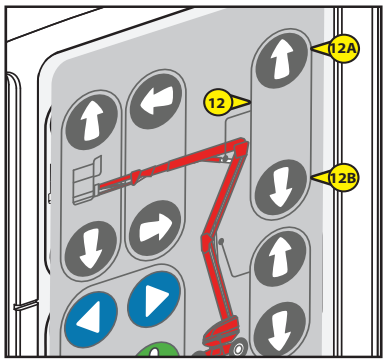

- These keys, used simultaneously with the button 8 in dead man position, lift and lower the upper arm.

A: LIFTING THE UPPER ARM
- Hold the dead man function 8 and press key 12A.

B: LOWERING THE UPPER ARM
- Hold the dead man function 8 and press on key 12B.

13 - Telescope extension/retraction keys

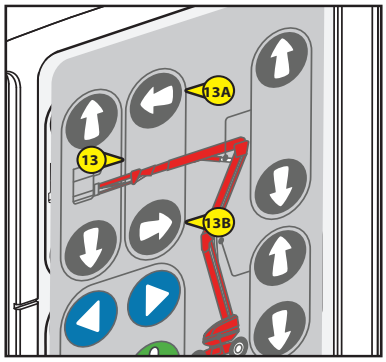

- These keys, used simultaneously with the button 8 in dead man position, extend and retract the telescope.

A: TELESCOPE RETRACTION
- Hold the dead man function 8 and press key 13 A.

B: TELESCOPE EXTENSION
- Hold the dead man function 8 and press on key 13 B.

14 - Jib lifting and lowering keys

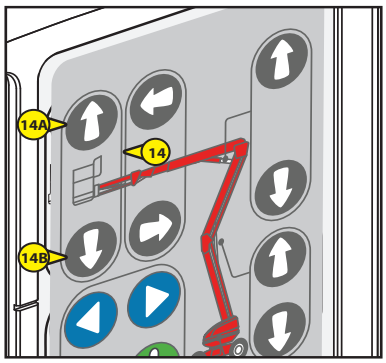

- These keys, used simultaneously with the button 8 in dead man position, lift and lower the jib.

A: JIB LIFTING
- Hold the dead man function 8 and press key 14A.

B: JIB LOWERING
- Hold the dead man function 8 and press on key 14B.

15 - Turntable rotation locking system

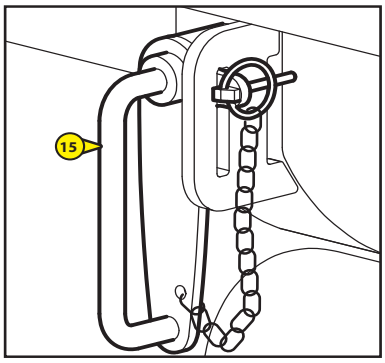

- This pin must be used when the platform is transported by truck or other means of transport (train, etc.) to stop the turntable rotating.

- Remove the clip and turn the pin to the left.
- Push the pin into the hole provided in the turntable.
- Turn the pin to the right and slide the bolt into the opening.
- Lock in position by replacing the pin.

Remember to remove it when using the access platform.

16 - Rotating beacon light

- The rotating beacon light comes on automatically when the access platform is travelling or performing a movement.

17 - Tilt sensor

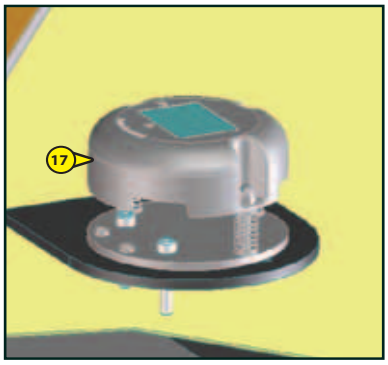

- This sensor controls the vibrating safety buzzer 41 when the platform has reached the maximum authorised tilt. The vibrating buzzer sounds intermittently (see "SAFETY DEVICES" paragraph).

18 - Horn

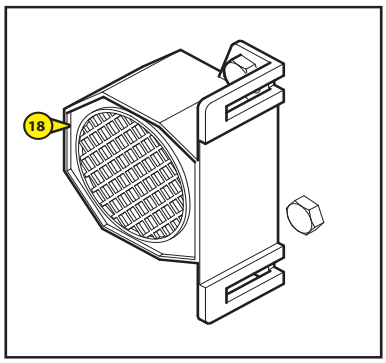

- This horn (fixed outside the hydraulic box on the side of the telescopic arm) is activated when the push button 29 on the basket control console is pressed.

19 - BACKUP PUMP BUTTON

- This button starts up the backup pump, which enables all of the basket movements to be performed and returns the basket to the ground in the event of a breakdown (see RESCUE PROCEDURE paragraph).

To be used only in the event of engine or electrical system failure.

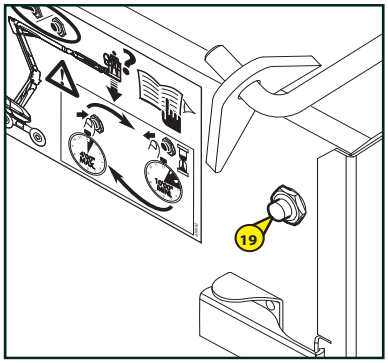

BASKET CONTROL CONSOLE

20 - UPPER ARM LIFTING AND LOWERING AND TURNTABLE ROTATION CONTROL LEVER

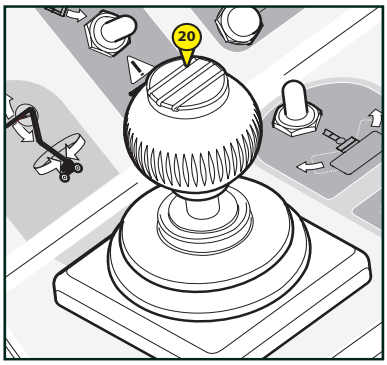

- The lever 20 is used to lift the upper arm and rotate the turntable.

NOTE: This lever is controlled gradually, which enables a highly precise approach. It should be operated smoothly, without jerks.

LIFTING THE UPPER ARM
- Push the lever upwards.

LOWERING THE UPPER ARM
- Pull the lever downwards.

ROTATION RIGHT
- Push the lever to the right.

ROTATION LEFT
- Push the lever to the left.

21 - LOWER ARM LIFTING AND LOWERING AND TELESCOPE EXTENSION AND RETRACTION CONTROL LEVER

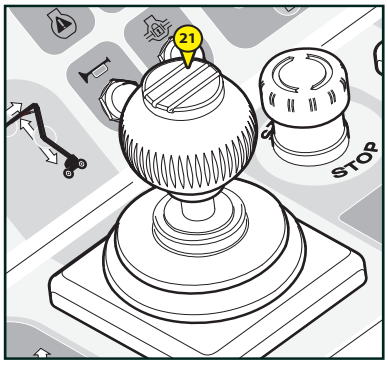

- The lever 21 raises the platform's lower and middle arms and extends and retracts the telescope.

NOTE: This lever is controlled gradually, which enables a highly precise approach. It should be operated smoothly, without jerks.

LIFTING THE LOWER ARMS
- Push the lever upwards.

LOWERING THE LOWER ARMS
- Pull the lever downwards.

TELESCOPE EXTENSION
- Push the lever to the left

TELESCOPE RETRACTION
- Push the lever to the right.

22 - Platform forward/reverse movement control lever

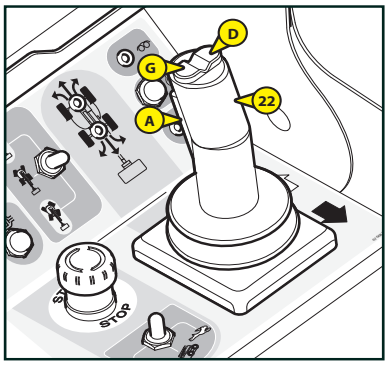

- The lever 22 is used to move the platform.
- Press the trigger A and the dead man pedal (see 40) to control movements from the platform control unit.
- If the pedal or the trigger A are released, no movements are possible.

NOTE: This lever is controlled gradually, which enables a highly precise approach. It should be operated smoothly, without jerks.

- TRANSLATION FORWARDS
- Push the lever forwards.
- TRANSLATION BACKWARDS
- Pull the lever backwards.

- RH STEERING
- Press the RH button.
- LH STEERING
- Press the LH button.

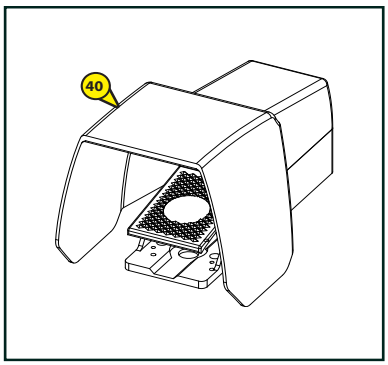

For rotation of the turntable/arm structure by more than 90° in relation to the chassis, there is concordance between the travel direction indicated by the arrows on the chassis and those on the basket control console (white and black arrows). Always refer to the arrows marked on the machine chassis to find out the direction of travel.

23 - Emergency Stop

This red mushroom-head circuit breaker enables you to cut off all the basket control consoles movements in the event of an anomaly or danger arising.

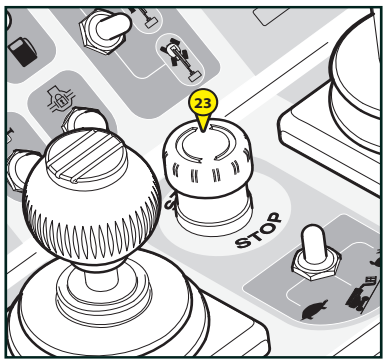

- Press the emergency stop button to cut off the movements controlled from the basket console.
- Turn the knob a quarter of a turn to the right to restore the power supply (the switch returns automatically to its initial position).

This instruction has priority under all circumstances, except when movements are instructed from the base control console.

Do not use the emergency stop button to simply stop the access platform, otherwise reset it as quickly as possible as no action can be carried out from the basket console.

To return to the ground even with the emergency stop activated, use the base console controls (see § Rescue procedure).

24 - "PRE-HEATING" INDICATOR LIGHT

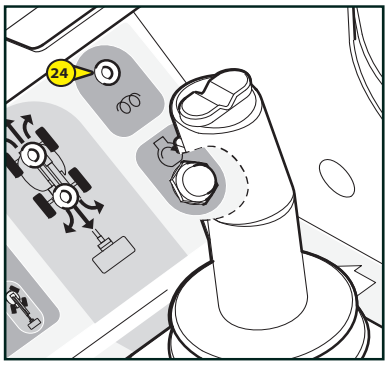

This light comes on when the machine is powered on:
- Either by turning the ignition key on the base (same time as the bar graph on the screen).
- Or by resetting the emergency stop button on the basket console in the platform.
- Wait for the indicator light to go out before activating the start button.

25 - START CONTROL BUTTON

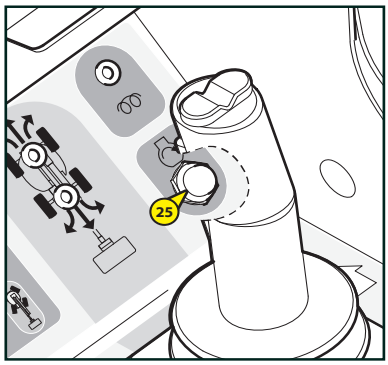

- Wait until the "preheat" light goes out, then press on the button 25 to start the platform from the basket console.

26 - "ENGINE FAULT" INDICATOR LIGHT

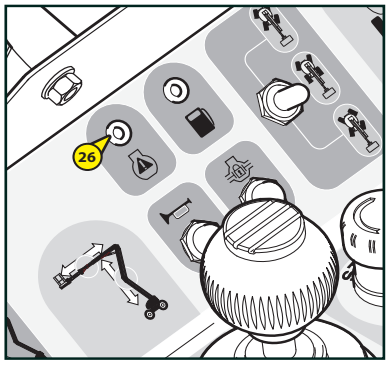

- This light comes on and a short intermittent audible signal sounds when the fault screens 11, 12, 13 are displayed on the base (see P.2-44).
- Switch off the engine immediately.

27 - 28 - STEERING MODE SELECTION AND AXLE REALIGNMENT

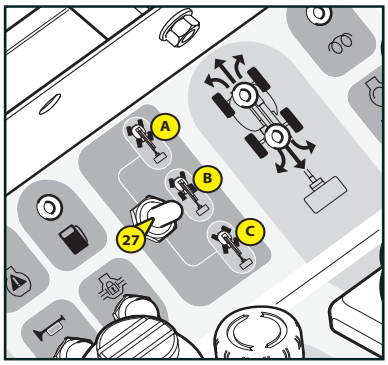

This switch has three positions.

POSITION A
- Selects "Crab" mode.

POSITION B
- Selects 2 wheel mode.

POSITION C
- Selects 4 wheel drive mode. In this configuration, the only possible travel speeds are: Tortoise or Ramp.

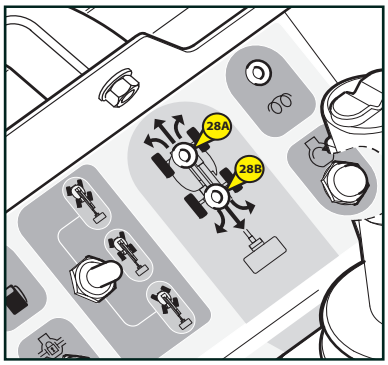

28A FRONT WHEEL ALIGNMENT
- This light is lit when the front wheels are correctly aligned in the machine's axis.

28B REAR WHEEL ALIGNMENT
- This light is lit when the rear wheels are correctly aligned in the machine's axis.

29 - Horn control button

- Pressing the button 29 will sound the horn 18.

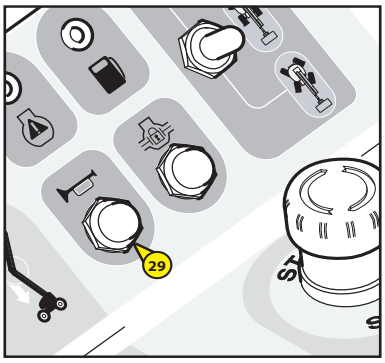

30 - Differential lock control button

NOTE: This control must be used at the same time as translation.

The differential lock enables the 2 rear drive wheel to turn at the same speed.
- To use it, press the button 30. To interrupt its use, release the button and stop translation.

- Try to use the differential lock while keeping the wheels in the machine's axis.

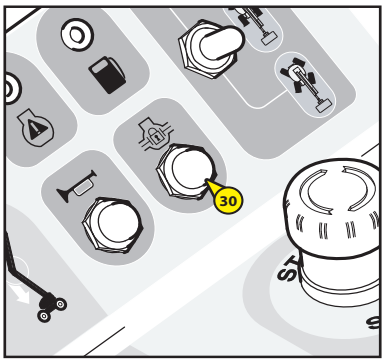

31 - Low fuel level indicator

- This light comes on when the fuel level is low. The basket buzzer is activated: 3 beeps every 10 minutes.

NOTE: When the light comes on, there are approximately 5 hours or 8 litres left in the tank.

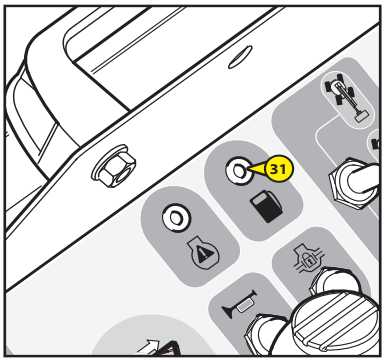

32 - Travel speed selection switch

- This switch has three positions.
POSITION A: TORTOISE (LOW SPEED)
POSITION B: RAMP (LOW SPEED WITH FULL POWER) Only to get over very steep ramps.
POSITION C: HARE (HIGH SPEED) Only with steering mode selector in position A (27 - crab movement) or in position B (27 - 2 wheel drive movement).

NOTE: If **position C** (hare speed) is selected when the machine is in **4 wheel drive steering mode**, it moves automatically to **position B** (ramp speed).

NOTE: If **position C** (hare speed) is selected when the machine is in **reverse mode**, it moves automatically to **position B** (ramp speed).

In Hare mode (position C), the turntable must be in the machine's axis.

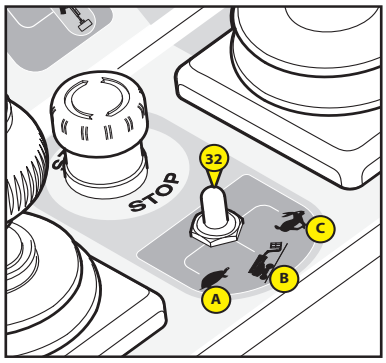

33 - Overload indicator light

- In the event of an overload in the basket, light comes on and the vibrating buzzer sounds continuously (see SAFETY DEVICES chapter)

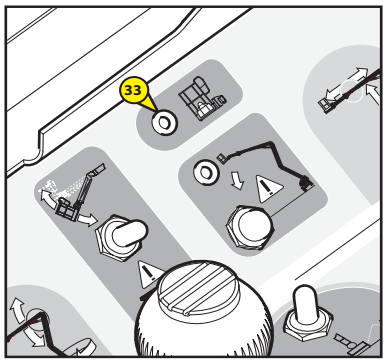

34 - Tilt indicator light

- If the platform has reached the maximum authorised tile, the LED comes on, the arm lifting movements are blocked and a long, intermittent audible alarm sounds.

35 - "Use on slope" button

- This button neutralises the movement restrictions, when the platform is on a slope. (see "SAFETY DEVICES" chapter)

In the event of use on a slope, there is a risk of loss of stability. The basket overload does, however, remain active.

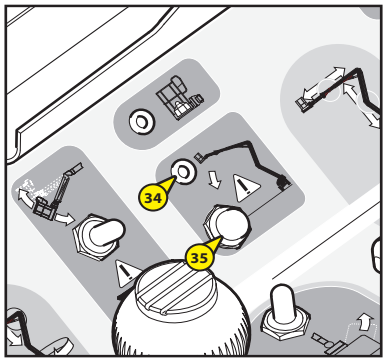

36 - Basket tilt switch

- This switch enables you to correct the basket's horizontality and fold the basket away completely in transport position.
CORRECTING THE BASKET UPWARDS
- Push the switch upwards.
CORRECTING THE BASKET DOWNWARDS
- Pull the switch downwards.

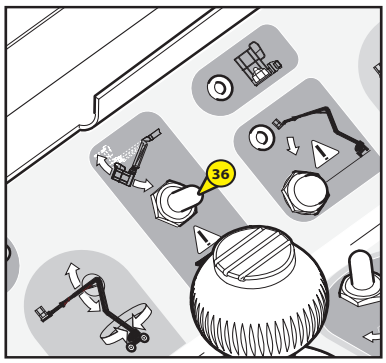

37 - Basket rotation switch

- This switch enables the basket to be rotated left and right

ROTATION RIGHT
- Push the switch to the right.

ROTATION LEFT
- Push the switch to the left.

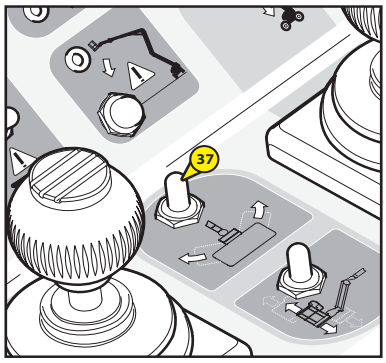

38 - Basket jib switch

- This switch enables you to raise and lower the jib arm

RAISING THE JIB ARM
- Push the switch forwards.

LOWERING THE JIB ARM
- Pull the switch backwards.

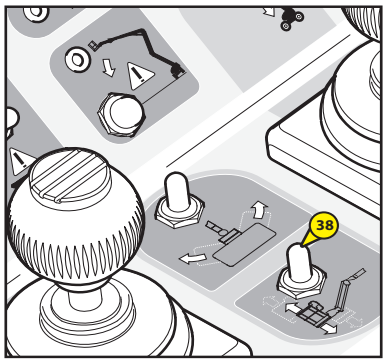

39 - Backup pump button

- This button is used to carry out all basket movements in order to return it to the ground in the event of a breakdown. (See "RESCUE PROCEDURE" chapter).

To be used only in the event of engine or electrical system failure.

Check the engine battery charge. It must be charged, otherwise the backup pump cannot be activated.

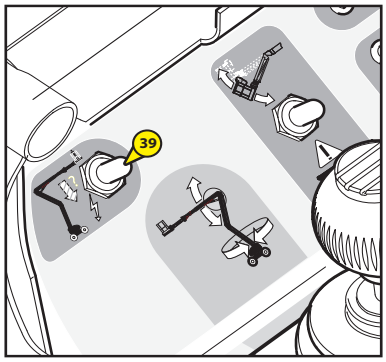

40 - "Dead man" pedal

- This pedal is fixed on the platform floor.
- This pedal has to be pressed to perform movements from the basket console.
- If the pedal is released, no controls are possible.

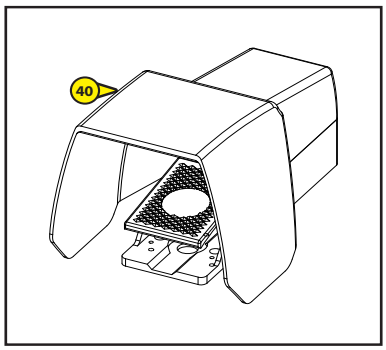

41 - Vibrating buzzer

- This vibrating buzzer is activated when the machine has reached the maximum authorised tilt or is overloaded.
- Intermittent: machine on slope. If the authorised tilt limit is exceeded, all movements are blocked apart from lowering of the arms, thus enabling a return to an acceptable level.
- Continuous: machine overloaded. If the platform is overloaded, all movements are blocked. Load must be shed before the platform can be operated.

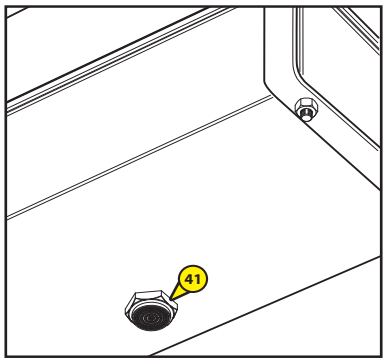

42 - Safety harness attachment points

- These attachments are used to fasten the harnesses when the operators are in the basket.

Maximum of one person per attachment point.

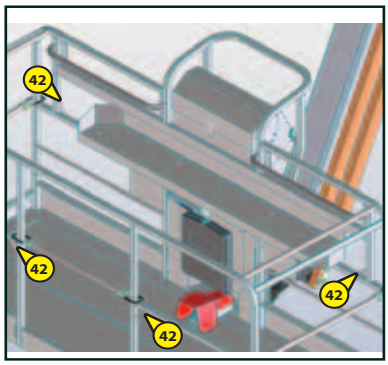

43 - Guardrail

- To climb into the basket, the rail must be held so that it does not fall when the user gets in.

Do not hold the guardrail with a clip or a string.

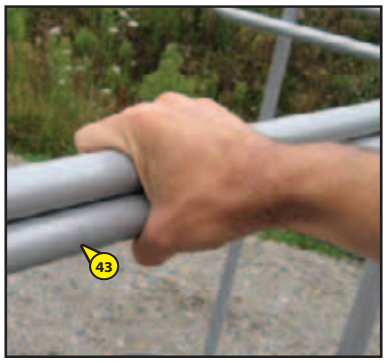

SCREEN DISPLAY - DESCRIPTION OF PAGES

1 - PRESENTATION PAGE

1 PRESENTATION PAGE:

- When the power is switched on, an initialisation page appears briefly on the screen, then the preheat page is displayed.

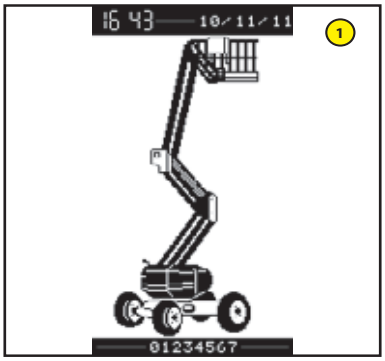

2 - PREHEAT PAGES

2 PREHEAT PAGE:

- The preheat page is displayed during the adjustable preheat cycle and the bar graph increases in proportion to the preheat time that has elapsed.

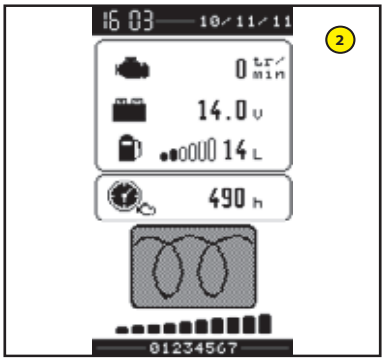

3 START-UP PAGE:

- When preheating is complete (full bar graph), an 'OK' indication is displayed, followed by the work page or possibly the faults page.

A: Network search

B: Start OK

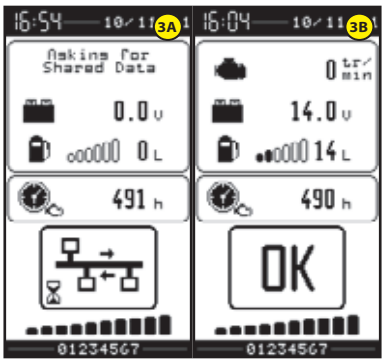

3 - WORK PAGES

4 WORK PAGE FROM THE BASE WITH FAULT PRESENT

5 WORK PAGE FROM THE BASE WITH ENGINE OIL PRESSURE FAULT PRESENT

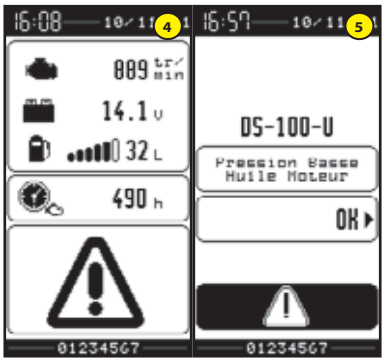

647121 (20/10/2017)
Mlt-x 735/741/1035 LSU S6-E3

4 - MENU DISPLAY

6 DISPLAYING THE MENU:

- After the power has been turned on, press on to display the available menus page and select the required menu using the arrows then confirm with OK.

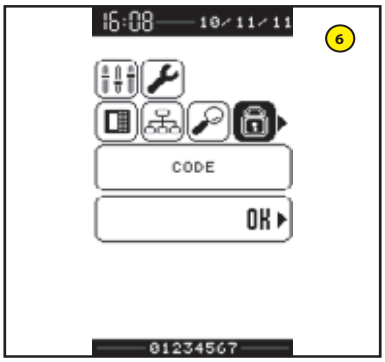

7 EDITING A SUB-MENU:

- After the menu has been chosen, select the different editing choices, if required, using the arrows .
- Use the buttons to edit the value of the selected option, then confirm once with OK to display the edit setting confirmation message, then press again to confirm. To return to the previous page press on Exit.

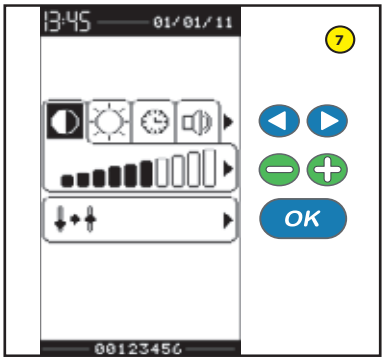

647121 (20/10/2017)
Mlt-x 735/741/1035 LSU S6-E3

DEFINITION OF SUB-MENUS

Icons	Menu	Sub-menu	Parameters	User		Dealers/Rental companies	
				Display	Maintenance	Display	Maintenance
	Access codes			Without		****	
	Screen adjustments	Screen adjustment: Contrast, brightness.			X		X
		Date, time, screen beep deactivation			X		X
	Codification	Programme and equipment code display.		X		X	
		Machine no. history display by module.				X	
	Diagnostic	1 - Engine hour meters	Rental counter	X			X
			Engine hour meter	X		X	
		2. Daily hours, engine running.		X		X	
		3 - Input/output display		X		X	
		4 - Fault log	Fault log display	X		X	
	Parameters	User options	Travel and movement beep options.		X		X
			Rotating beacon light when powered on option.		X		X
		Dealer options	Telescope blocking				X
			Prevent working mode travel				X
			Prevent tilting in working mode				X
			Wheel realignment activation				X
			Safe Man System activation				X
		Manufacturer options	Code immobiliser			X	
		Languages > French, English, German, Dutch only				X	
		System parameters	Engine management				X
			Lower arms				X
			Upper arm				X
			Telescope				X
			Telescope stop				X
			Jib				X
			Turntable rotation				X
			Basket tilting				X
			Basket rotation				X
			Steering management				X
			Maintenance frequency				X
	Maintenance	Maintenance	Display of next planned maintenance operations	X		X	
			Verification of maintenance operations carried out				X
		Maintenance history	Display of maintenance operations carried out			X	

647121 (20/10/2017)
MHx735/741/1035 LSU S6-E3

Icons	Menu	Sub-menu	Parameters	User		Dealers/Rental companies	
				Display	Maintenance	Display	Maintenance
Display of "CALIBRATION" icon after code is entered.							
	Calibrations	1 - Engine speed calibration					X
		2 - Joystick calibration					X
		3 - Speed calibration	Lower arms max lift speed				X
			Lower arms max lowering speed				X
			Upper arm max lift speed				X
			Upper arm max lowering speed				X
			Telescope max extension speed				X
			Telescope max retraction speed				X
			Jib max lift speed				X
			Jib max lowering speed				X
			Basket tilt max extension speed				X
			Basket tilt max retraction speed				X
			Turntable max right rotation speed				X
			Turntable max left rotation speed				X
			Basket max right rotation speed				X
			Basket max left rotation speed				X
			Max forward working travel speed			X	
			Max backward working travel speed			X	
		4 - Overload calibration					X
		5 - Generator calibration					X
		6 - Parameter management	Restore machine parameters				X
			Save machine parameters				X
			Restore basic factory values				X

647121 (20/10/2017)
MH-x 735/741/1035 LSU S6-E3

USE OF THE PLATFORM

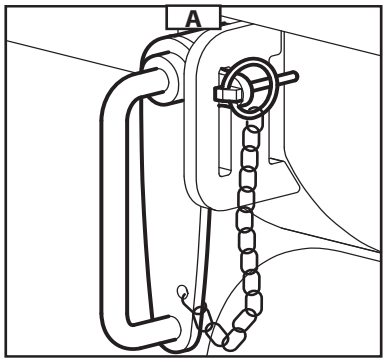

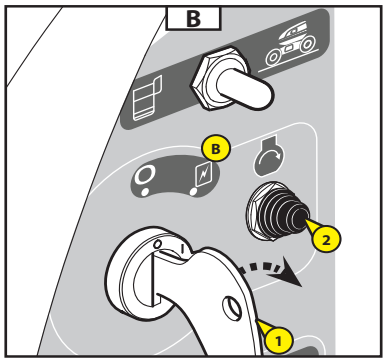

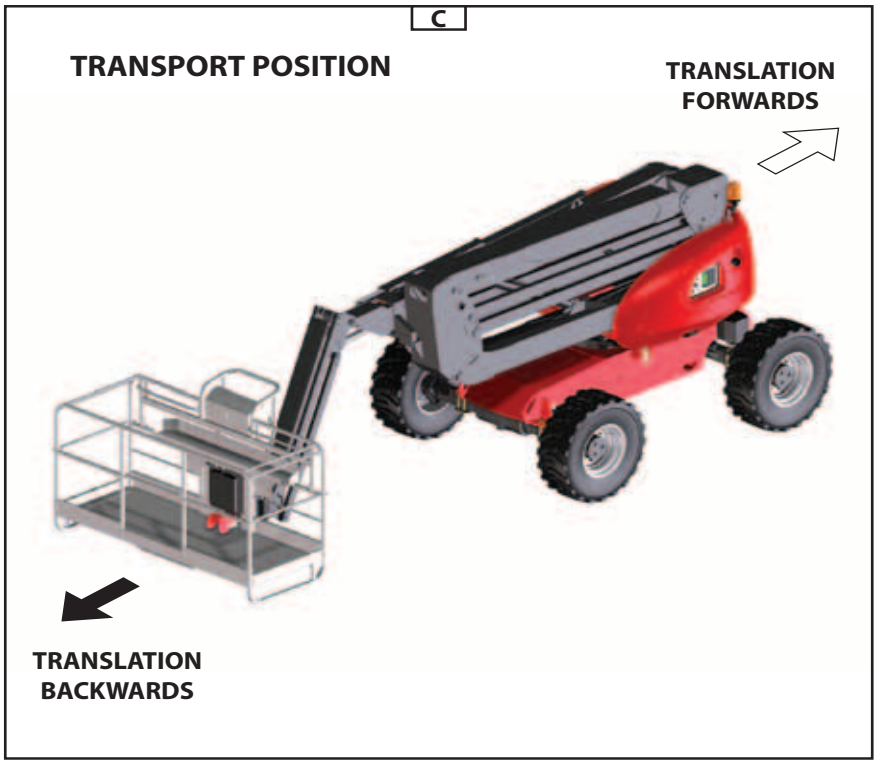

BEFORE STARTING THE PLATFORM

- Check the following levels:

  - Engine oil
  - Hydraulic tank oil.
  - Coolant.

STARTING THE PLATFORM

- Turn the ignition key 1 to position B to switch on the ignition (Fig. B).
- Press the button 2 to start the engine (Fig. B).

Do not engage the starter motor for more than 30 seconds and carry out the preheating between unsuccessful attempts.

- Release the button as soon as the engine has started and leave to idle.

Never try to push or pull the platform to start it. This would cause serious damage to the transmission.

MOVING IN TRANSPORT / OPERATING MODE

- Before moving and using the machine, remove the locking pin 1 from the turntable (see Fig. A).
- The access platform has two distinct movement modes: transport (Fig. D) and operating mode (Fig. E) (forward direction (Fig. C)).
- Transport mode: the platform's arms are in low position with the telescope retracted, the jib can be lifted to the highest point. This mode permits movement at high speed, and movement in excess of the machine's tilt (see SPECIFICATIONS chapter) (Fig. D).
- Operating mode: one or more of the platform's arms are lifted and/or the telescope is extended. In this mode, translation movements are made at slow speed and the tilt and overload safety systems are activated (Fig. E).

NOTE: *You must use Ramp speed (full power with speed restricted) to get over steep slopes or to move on very rough terrain. This may prove very useful if, for example, you need to take an access ramp to get the platform up onto a truck bed.*

In operating mode, any movements on uneven ground, unstable ground or slopes higher than the authorised tilt (see SPECIFICATIONS chapter), which are likely to tip or unbalance the platform are FORBIDDEN.

The turntable must be in the access platform's axis during travel in high speed mode

Before driving the platform, make sure that the turntable is correctly oriented in relation to the chassis, and therefore in relation to the translation direction. Look at the black arrow and the white arrow for this.

D

Transport mode

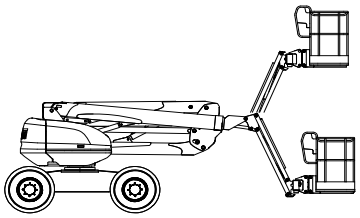

E

Operating mode

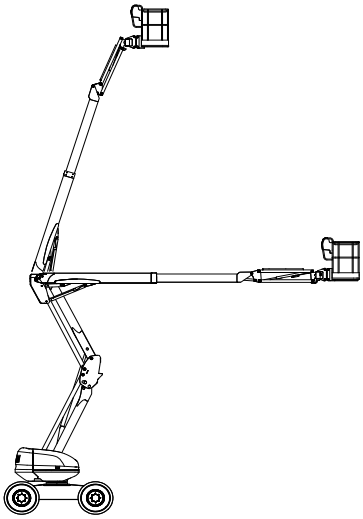

INSTALLATION IN THE WORKPLACE AND LIFTING

- The access platform has been designed to work on a flat, horizontal surface: it is important to clear the area in which the access platform must work.
- Bring the access platform to the workplace.
- If necessary, load the equipment you want to carry (stack it in a manner so as not to inconvenience the operator and avoid anything falling off).
- Climb into the platform.

A safety helmet and a harness must be worn.

- Press the "Dead man" pedal and start operation to get to the work area.

NOTE: *If the platform is detached from the chassis, travel is automatically done at slow speed.*
Only the jib can be raised completely while keeping to transport speed.

When manoeuvring the platform (lifting, rotation, etc.), look around and above you. Pay particular attention to electrical cables and any object that may be within the access platform's field of operation.

Familiarise yourself with the instruments on the ground emergency and maintenance console and the basket console described in the preceding pages and in particular the warnings specifying the risks associated with performing certain manoeuvres.

SAFETY DEVICES

- If the platform is overloaded, the vibrating buzzer is permanently activated and all movements are blocked.
  - Solution: shed load.

LOWERING

- Once work is completed: retract the telescope, then lower the arms to bring the platform into the transport position.

Pay attention to people on the ground when lowering the basket.

STOPPING THE ACCESS PLATFORM

- When the access platform is not being used, switch off the power supply by positioning the ignition switch in neutral position (see 1 - ignition switch).

LOADING / UNLOADING THE ACCESS PLATFORM

Check that the safety instructions associated with the flatbed have been correctly applied before loading the access platform and ensure that the driver of the vehicle has been informed of the dimensional characteristics and ground of the platform (see SPECIFICATIONS chapter).

- When being loaded onto a truck bed, the access platform must be in transport position:
- Counterweight facing the ramp (counterweight over the access platform's steering wheels) (see 1 - operating and safety instructions; chapter SAFETY STICKERS; items 1 and 2).

  - Upper arm on its stop
  - Lower and intermediate arms in the low position
  - Telescope retracted
  - It is possible to raise the jib so that it does not touch the ground but we do not advise that you make any translation movements with the basked elevated excessively; keep this in the lowest position possible during manoeuvres (risk of something falling or of impacts, see 1 - operating and safety instructions, chapter Driving instructions).
  - Block rotation of the platform's turntable using pin 1 (Fig. A) (See INSTRUMENTS AND CONTROLS chapter, TURNTABLE ROTATION LOCKING SYSTEM paragraph)
  - Use Ramp speed

Ensure that the truck bed is of sufficient size and load capacity for transporting the platform. Check also the allowable ground contact pressure of the truck bed relative to the platform.

There is a risk of the platform losing grip (sliding or skidding) when going up and down the loading ramps if they are wet, muddy or show any signs of dampness. You should therefore attach a winch to the machine's anchorage points.

LOADING

- Fasten the loading ramps to the truck bed so as to obtain the lowest possible angle to take the platform up (Fig. B).
- Block the transport truck bed's wheels 1 (Fig. C).

Ensure that you adapt the access platform's travel speed by controlling it with the travel joystick.

PROCEDURE FOR FOLDING UP THE ACCESS PLATFORM

- Raise the upper arm.
- Activate basket inclination to fold up the basket under the upper arm.
- Lower the upper arm; take care not to bump the basket on the ground.
- Activate basket inclination once again to fold up the basket as much as possible under the upper arm.

As the basket is wider, extend the telescope slightly to fold the basket under the upper arm and put it in transport position.

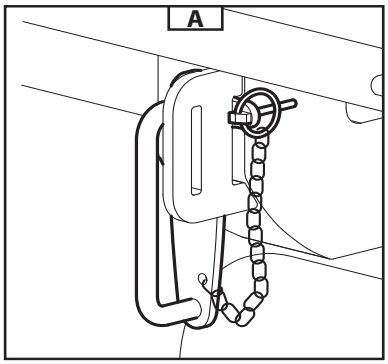

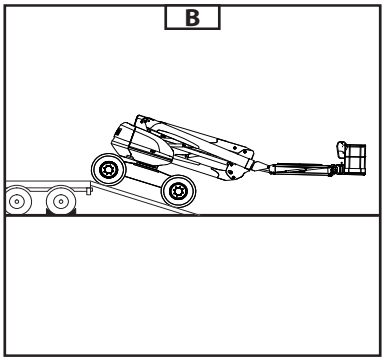

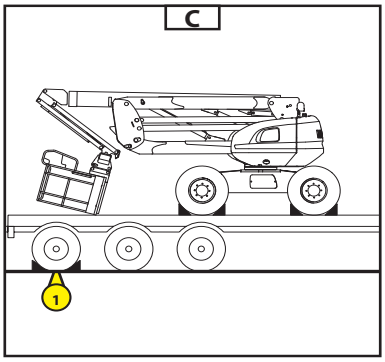

Lashing down the access platform

- Fix wedges on the truck bed in front of and behind each of the access platform's tyres 2 (Fig. E).
- Also fix wedges to the truck bed on the outside and the inside of each tyre 3 (Fig. D).
- Fasten the access platform to the transport platform with straps or chains that are sufficiently strong 4 (Fig. E), at the front and rear, by passing them through the slinging rings 5 (Fig. D and F).

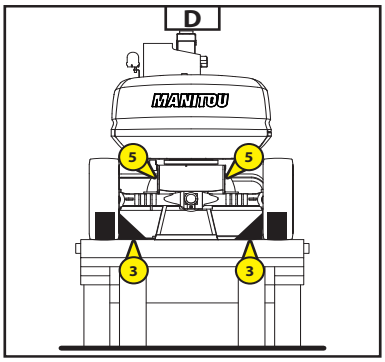

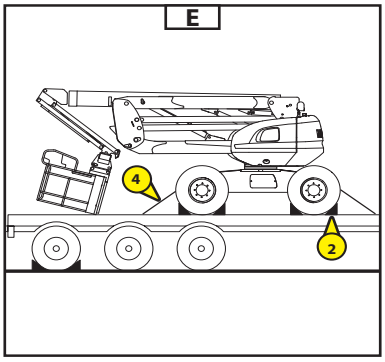

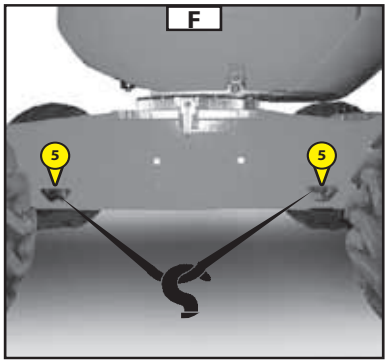

RESCUE PROCEDURE

- This section describes the procedures to follow and the controls to be used in the event of a problem (if the access platform breaks down or there is a person stuck in the basket) while the access platform is being used.
- When first taking over the machine and regularly thereafter, this procedure must be read and thoroughly understood by the operator and all the people whose responsibilities focus around activities in contact with the machine.

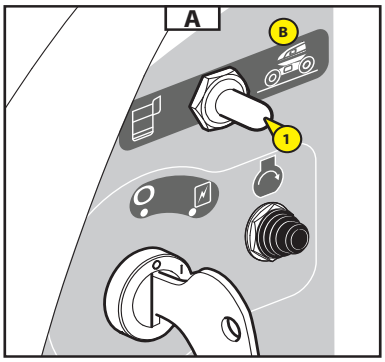

IN THE EVENT OF OPERATOR INDISPOSITION

- If the operator should fall ill, accidentally trigger the basket emergency stop button or find himself incapable of manoeuvring, the person present on the ground can take over the platform controls.
- Follow the instructions below.
- Put the switch 1 (Fig. A) into position B.
- The base console screen comes on.
- Hold the switch 1 in place to take control of the platform's movements.
- Lower the platform using the base controls.

Pay attention to any constructions or objects that may be under the access platform.

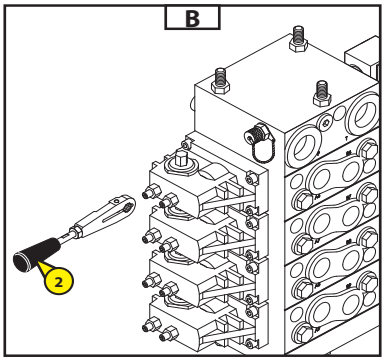

IN THE EVENT OF AN ACCIDENT OR A BREAKDOWN

POWER FAILURE

- If an accident or breakdown occurs making the electrical control boxes unusable, the machine is provided with systems for making all the platform movements manually.
- Take off the right-hand turntable cover.
- Take the control lever 2 (Fig. B) and position it on one of the components depending on the movement required (Fig. D-E-F-G).

During these operations, the system no longer manages:
- Slope safety.
- Basket overload.

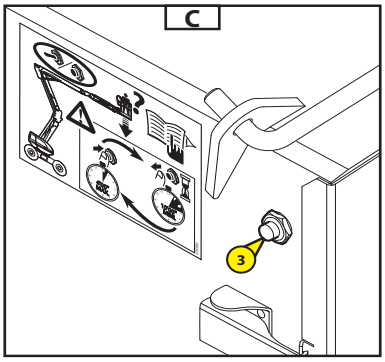

- To lift and lower the lower arms (position the lever at I).
- Press the button 3 (Fig. C) to activate the backup pump and at the same time push the lever (Fig. D) towards:
  - A - lower the lower arms
  - B - lift the lower arms

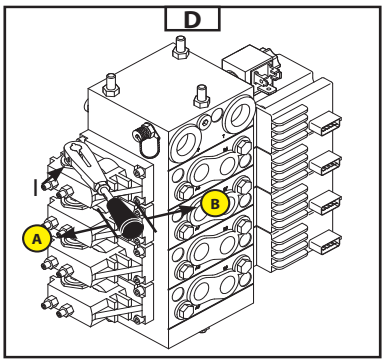

To extend and retract the telescope (position the lever at II).

- Press the button 3 (Fig. C) to supply power to the distributor and at the same time pull the lever (Fig. E) towards:

- A - telescope retraction
- B - telescope extension

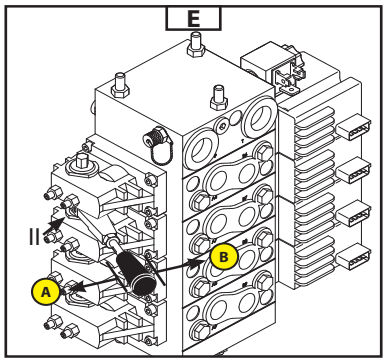

To lift and lower the upper arm (position the lever at III).

- Press the button 3 (Fig. C) to supply power to the distributor and at the same time push the lever (Fig. F) towards:

- A - lower the upper arm
- B - lift the upper arm

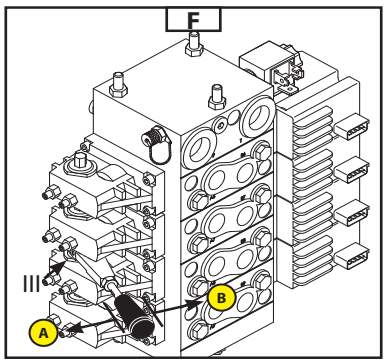

Rescue procedure on main distributor:

To rotate the turntable to the left (position the lever at IV).

- Turn the knob of valve 4 clockwise (Fig.H).

- Press the button 3 (Fig. C) to supply power to the distributor and at the same time pull the lever (Fig. G) towards B.

- Turn the knob of valve 4 anticlockwise (Fig.H).

To rotate the turntable to the right (position the lever at IV).

- Turn the knob of valve 5 clockwise (Fig.H).

- Press the button 3 (Fig. C) to supply power to the distributor and at the same time pull the lever (Fig. G) towards B.

- Turn the knob of valve 5 anticlockwise (Fig.H).

To lift the jib (position the lever at IV).

- Turn the knob of valve 6 clockwise (Fig.H).

- Press the button 3 (Fig. C) to supply power to the distributor and at the same time pull the lever (Fig. G) towards B.

- Turn the knob of valve 6 anticlockwise (Fig.H).

To lower the jib (position the lever at IV).

- Turn the knob of valve 7 clockwise (Fig.H).

- Press the button 3 (Fig. C) to supply power to the distributor and at the same time pull the lever (Fig. G) towards B.

- Turn the knob of valve 7 anticlockwise (Fig.H).

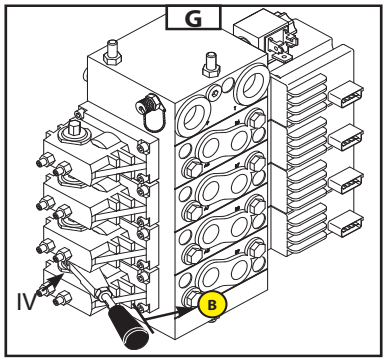

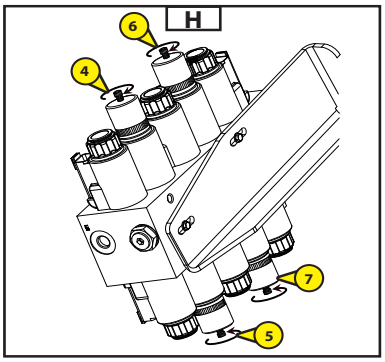

647121 (20/10/2017)
Mlt-x 735/741/1035 LSU S6-E3

OVERRIDE FROM THE BASKET

- Press the button 39 (Fig. J) to activate the backup pump and at the same time use the basket controls

- (See INSTRUMENTS AND CONTROLS chapter
- B - PLATFORM CONTROL CONSOLE)

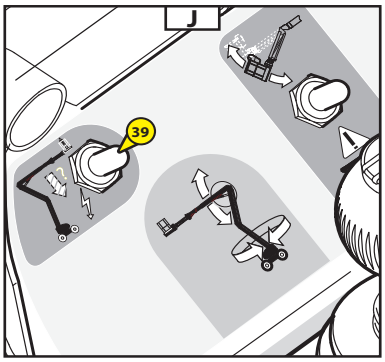

Only to be used to bring the basket back down to the ground in the event of an engine failure.

PROPORTIONAL DISTRIBUTOR

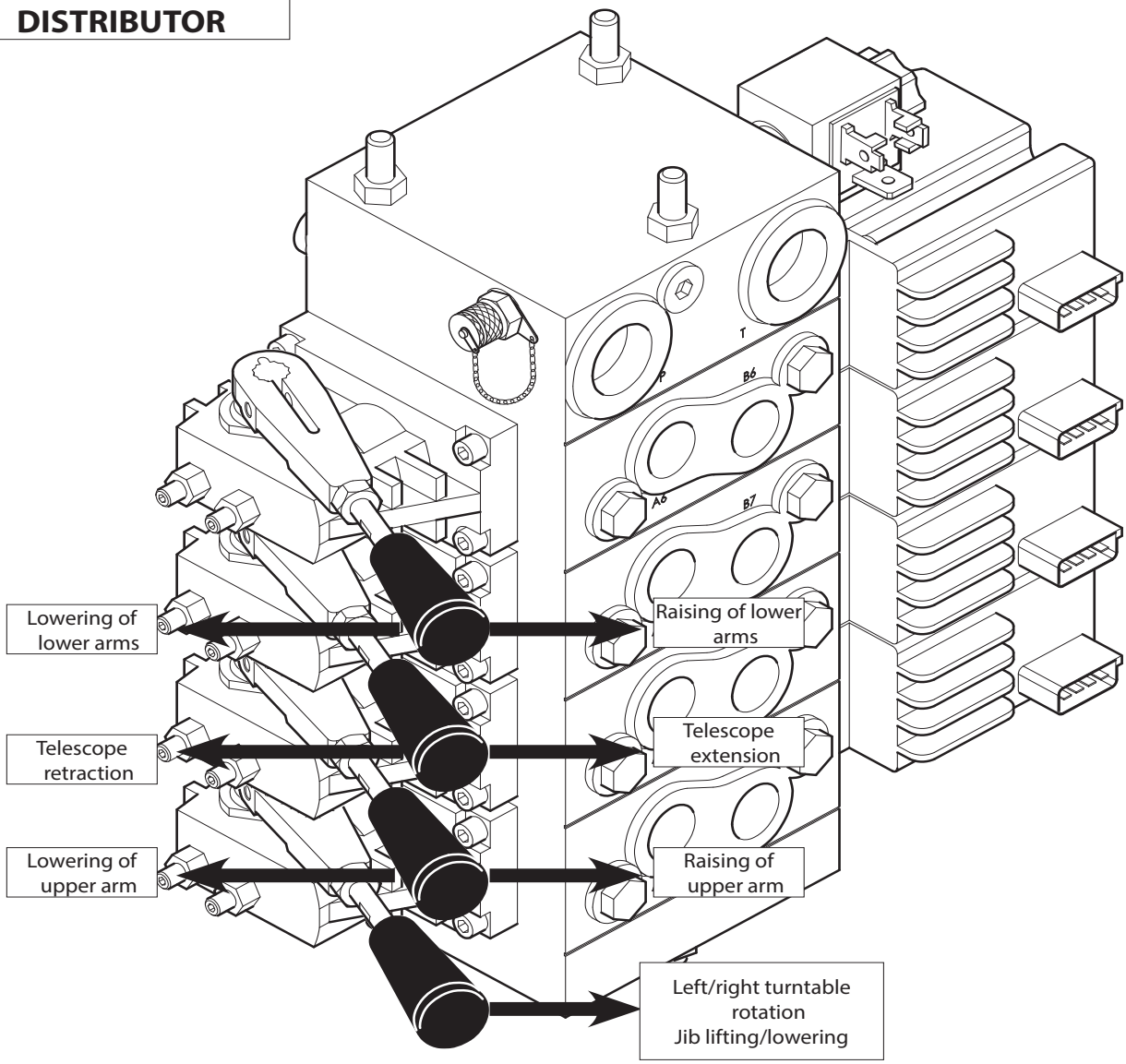

MAIN DISTRIBUTOR

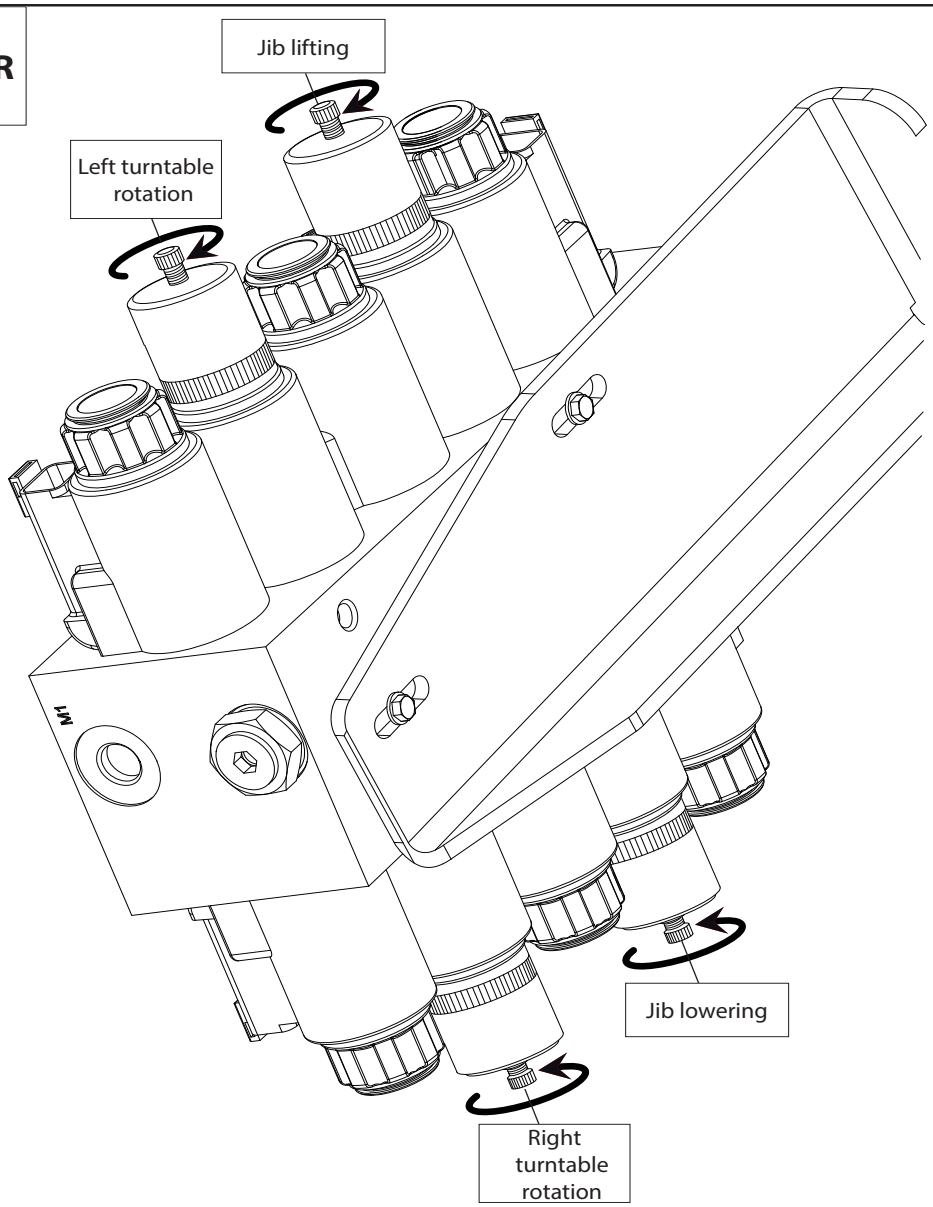

647121 (20/10/2017)
MHx 735/741/1035 LSU S6-E3

OPTIONS

1 - Generator option

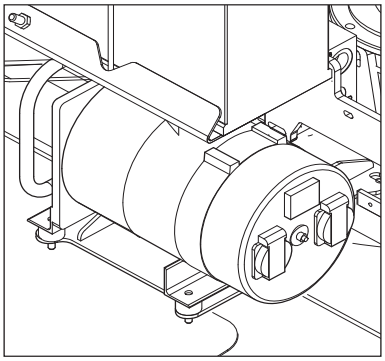

Warning for users of platforms with this option:

Do not connect electrical equipment that does not have a breaker. When the generator starts up, voltage peaks may occur.

Use the switch on the basket console to activate the generator.

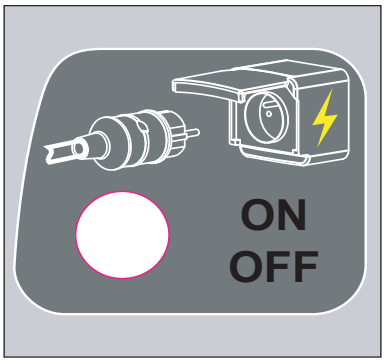

Reminder:

- Unladen idling speed of 160 ATJ Plus Euro 3 (factory setting) with 3.5 kW generator option — 1,400 rpm
- Unladen idling speed of 160 ATJ Plus Euro 3 (factory setting) with 5 kW generator option — 1,500 rpm

2 - Safe Man System option

The Safe Man System option is a safety system that cuts off all controls from the basket when activated by the user of the access platform.

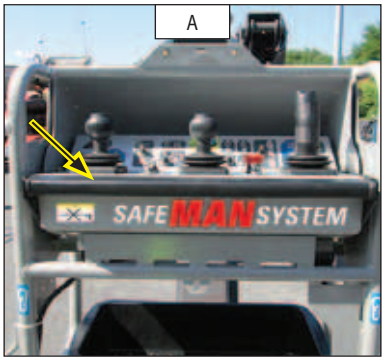

OPERATION

- Every time the platform is powered up, the system is checked: a beep sounds and the blue light flashes (Fig. C).
- When pressure is applied to the safety edge (Fig. A), the system cuts off all platform controls. The blue light flashes and a horn sounds.
- If the user stops applying pressure to the safety edge:

Pressing once on the platform's "OFF" reset button (Fig. B), the user can retake control of the platform controls. The flashing blue light and the horn are deactivated.

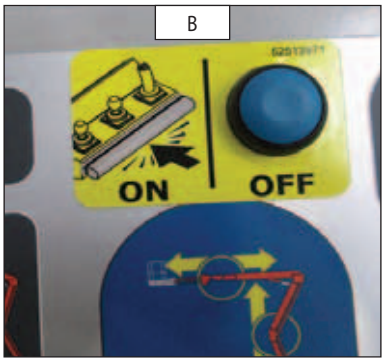

- If the user continues to apply pressure to the safety edge:

By pressing the platform's "OFF" reset button (Fig. B) once, the user can resume control of the platform. The flashing blue light and the horn will stop when the user ceases to apply pressure to the safety edge.

3 - MAINTENANCE

TABLE OF CONTENTS

ORIGINAL MANITOU SPARE PARTS AND EQUIPMENT	3-4
START-UP CHECKLIST	3-5
FILTER CARTRIDGES AND BELTS	3-6
SAFETY COMPONENTS	3-8
LUBRICANTS AND FUEL	3-10
SERVICING SCHEDULE 160 ATJ PLUS EURO 3	3-12
A - DAILY OR EVERY 10 HOURS OF SERVICE	3-16
B - EVERY 50 HOURS OF SERVICE	3-20
C - EVERY 250 HOURS OF SERVICE	3-28
D - EVERY 500 HOURS OF SERVICE	3-34
E - EVERY 1,000 HOURS OF SERVICE	3-37
F - EVERY 2,000 HOURS OPERATION	3-39
G - OCCASIONAL MAINTENANCE	3-39

647121 (20/10/2017)
MHtx 735/741/1035 LSU S6-E3

ORIGINAL MANITOU SPARE PARTS AND EQUIPMENT

OUR PERSONNEL LIFTING PLATFORMS MUST BE SERVICED USING ORIGINAL MANITOU PARTS.

IF YOU USE PARTS THAT ARE NOT ORIGINAL MANITOU PARTS,

YOU RISK - Legally, incurring liability on yourself in the event of an accident.

- Technically, causing operating malfunctions or reducing the access platform's service life.

THE USE OF COUNTERFEIT PARTS OR COMPONENTS NOT APPROVED BY THE MANUFACTURER,
WILL CAUSE YOU TO LOSE THE BENEFIT OF THE CONTRACTUAL GUARANTEE.

BY USING ORIGINAL MANITOU PARTS FOR MAINTENANCE OPERATIONS,

YOU BENEFIT FROM OUR EXPERTISE

Through its network, MANITOU provides the user with,

- Know-how and competence.
- The guarantee of high-quality work.
- Original replacement parts.
- Help with preventive maintenance.
- Efficient diagnostic help.
- Improvements due to experience feedback.
- Training of the operating personnel.
- Only the MANITOU network knows the personnel lifting platform's design in detail and therefore has the best technical capabilities for providing maintenance.

ORIGINAL REPLACEMENT PARTS ARE DISTRIBUTED EXCLUSIVELY
BY MANITOU AND ITS DEALER NETWORK.
The dealer network list is available on the MANITOU web site: www.manitou.com

START-UP CHECKLIST

0 = OK 1 = Missing 2 = Incorrect

100	ENGINE	
01	Air filter	
02	Fuel tank	
03	Fuel lines - Filter	
04	Injection or carburising system	
05	Radiator and cooling system	
06	Belts	
07	Hoses	
101	TRANSMISSION	
01	Direction reversal system	
02	Gear shift	
03	Cut-off pedal	
04	Clutch	
102	AXLES/TRANSFER GEAR BOX	
01	Operation and seal	
02	Stop settings	
103	HYDRAULIC/HYDROSTATIC CIRCUIT	
01	Tank	
02	Pumps and couplings	
03	Tightening of connections	
04	Lift cylinder(s)	
05	Tilt cylinder(s)	
06	Attachment cylinder(s)	
07	Telescope cylinder(s)	
08	Compensation cylinder(s)	
09	Steering cylinder(s)	
10	Distributor	
11	Counterbalance valve	
104	BRAKE SYSTEM	
01	Service brake and parking brake operation	
02	Brake fluid level	
105	LUBRICATION AND GREASING	
106	JIB / MANISCOPIC / MANIACCESS ASSEMBLY	
01	Beam and telescope(s)	
02	Skid	
03	Hinges	
04	Fork carriage	
05	Forks	
107	MAST ASSEMBLY	
01	Fixed and mobile uprights	
02	Fork carriage	
03	Chains	
04	Rollers	
05	Forks	

108	ATTACHMENTS	
01	Fitting on machine	
02	Hydraulic couplings	
109	CABIN / PROTECTOR /ELECTRIC CIRCUIT	
01	Seat	
02	Dashboard and radio	
03	Horn and visual alarm/safety system	
04	Heating / Air conditioning	
05	Windscreen wiper / windscreen washer	
06	Road horn	
07	Reversing horn	
08	Road lights	
09	Additional lights	
10	Rotating beacon light	
11	Battery	
110	WHEEL	
01	Rims	
02	Tyre / Pressure	
111	SCREWS	
112	FRAME AND BODYWORK	
113	PAINTWORK	
114	GENERAL OPERATION	
115	OPERATOR'S MANUAL	
116	CUSTOMER INSTRUCTIONS	

FILTER CARTRIDGES AND BELTS

ENGINE			
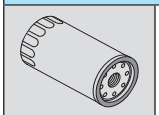	ENGINE OIL FILTER Part number: 749613 Change: 500 H	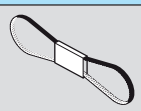	FAN BELT Part number: 749605 Change: 500 H
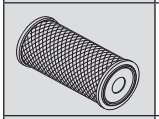	DRY AIR FILTER CARTRIDGE Part number: 227959 Clean: 50 H Change: 500 H		
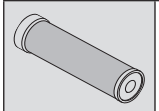	DRY AIR FILTER SAFETY CARTRIDGE Part number: 227960 Change: 1,000 H*		
	FUEL FILTER CARTRIDGE Part number: 781909 Change: 500 H		

*: This frequency is given for information only (see: 3 - MAINTENANCE: SERVICING SCHEDULE) for cleaning and changing.

HYDRAULICS			
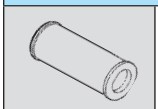	HYDROSTATIC TRANSMISSION OIL FILTER CARTRIDGE Part number: 518251 Change: 500 H	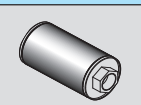	SUCTION STRAINER FOR HYDRAULIC OIL TANK Part number: 19910 Clean: 1,000 H
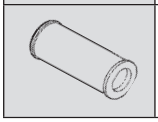	AUXILIARY HYDRAULIC OIL FILTER CARTRIDGE Part number: 518251 Change: 500 H	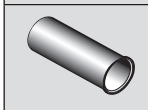	FILLING SIEVE FOR HYDRAULIC TANK Part number: 599523

647121 (20/10/2017)
MHtx 735/741/1035 LSU S6-E3

SAFETY COMPONENTS

ELECTRICITY			
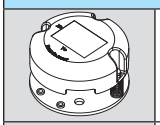	TILT SENSOR Part number: 52521690	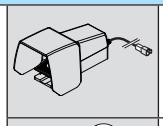	DEAD MAN PEDAL Part number: 831136
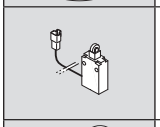	OVERLOAD SENSOR Part number: 676845	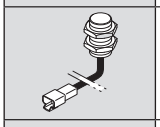	ARM DOWN SENSOR Part number: 833439
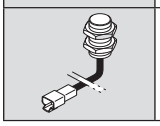	TELESCOPE SENSOR Part number: 52522884	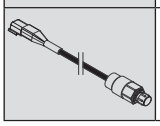	PRESSURE SWITCH Part number: 52524496

647121 (20/10/2017)
MHx735/741/1035 LSU S6-E3

LUBRICANTS AND FUEL

USE THE RECOMMENDED LUBRICANTS AND FUEL:
- For topping up, oils may not be miscible.
- For oil changes, MANITOU oils are perfectly appropriate.

DIAGNOSTIC ANALYSIS OF OILS
If a service or maintenance contract has been organised with the dealer, a diagnostic analysis of engine and axle oils may be requested depending on the rate of use.

(*) RECOMMENDED FUEL SPECIFICATION
Use a high-quality fuel to obtain optimal performance of the engine.
- N590 diesel fuel type - Auto/C0/C1/C2/C3/C4
- BS2869 Class A2
- ASTM D975-91 Class 2-2DA, US DF1, US DF2, US DFA
- JIS K2204 (1992) Grades 1, 2, 3 and Special Grade 3.

ENGINE				
UNITS TO BE LUBRICATED	CAPACITY	RECOMMENDATION	PACKAGING	PART NUMBER
ENGINE	9.5 litres	MANITOU oil Engine SAE 15W/40	5 l 20 l 55 l 209 l 1,000 l	661706 582357 582358 582359 490205
COOLING CIRCUIT	8 litres	Cooling fluid (protection - 25°)	1.5 l 5 l 20 l	894508 788246 788247
FUEL TANK	Litres	Diesel fuel (*)		

TRANSMISSION				
UNITS TO BE LUBRICATED	CAPACITY	RECOMMENDATION	PACKAGING	PART NUMBER
TRANSFER GEAR BOX	0.75 litres	TRACTELF AXLE oil SF3	5 l 20 l 209 l	545 976 582 391 894 257
TRANSMISSION UNIVERSAL JOINT		MANITOU grease BLUE multi-purpose	400 g 1 Kg 5 kg 20 kg 50 kg	161589 720683 554974 499233 489670

HYDRAULICS				
UNITS TO BE LUBRICATED	CAPACITY	RECOMMENDATION	PACKAGING	PART NUMBER
HYDRAULIC OIL TANK	55 Litres	MANITOU oil ISO VG 46 hydraulic oil	5 l 20 l 55 l 209 l	545500 582297 546108 546109

LIFTING STRUCTURE			
UNITS TO BE LUBRICATED	RECOMMENDATION	PACKAGING	PART NUMBER
GENERAL GREASING	MANITOU grease High Performance	Cartridge 400 g	479330
TURNTABLE CROWN GEAR & BEARING RACEWAY LUBRICATION			
TURNTABLE RING GEAR LUBRICATION	Shell oil GL 205 OIL	Aerosol	744802
TURRET REDUCTION GEAR BRAKE / REDUCER	MANITOU oil Mechanical transmission for axles and gearboxes SAE80W90	2 l 20 l 55 l 209 l	499237 546330 546221 546220

FRONT AXLE				
UNITS TO BE LUBRICATED	CAPACITY	RECOMMENDATION	PACKAGING	PART NUMBER
FRONT AXLE DIFFERENTIAL	4.8 Litres	TRACTELF axle oil SF3	5 l 20 l 209 l 1,000 l	545976 582391 894257 720149
FRONT WHEEL REDUCING GEAR	2 x 0.8 Litre	SHELL oil SPIRAX A 90	20 l 209 l	661950 662000

REAR AXLE				
UNITS TO BE LUBRICATED	CAPACITY	RECOMMENDATION	PACKAGING	PART NUMBER
REAR AXLE DIFFERENTIAL	4 litres	TRACTELF axle oil SF3	5 l 20 l 209 l 1,000 l	545976 582391 894257 720149
REAR WHEEL REDUCING GEAR	2 x 0.8 Litre	SHELL oil SPIRAX A 90	20 l 209 l	661950 662000

SERVICING SCHEDULE 160 ATJ PLUS EURO 3

(1): MANDATORY 500 HOUR OR 6 MONTH SERVICE. This service must be carried out after approximately the first 500 hours of operation or within the 6 months following the start-up of the machine (whichever occurs first).

(2): The engine oil and oil filter must be replaced after the first 50 hours of service, then every 500 hours of service.

A = ADJUST, C = CHECK, G = GREASE, N = CLEAN, P = BLEED, R = REPLACE, V = DRAIN	PAGE	(1)	DAILY OR EVERY 10 HOURS OF SERVICE	EVERY 50 HOURS OF SERVICE	EVERY 250 HOURS OF SERVICE	EVERY 500 HOURS OF SERVICE OR EVERY 6 MONTHS	EVERY 1,000 HOURS OF SERVICE OR EVERY YEAR	EVERY 2,000 HOURS OF SERVICE OR EVERY TWO YEARS	EVERY 4,000 HOURS OF SERVICE	OCCASIONAL
ENGINE										
Engine oil level	3-13	C	C	<<<	<<<	<<<	<<<	<<<	<<<	
Cooling liquid level	3-13/3-37	C	C	<<<	<<<	<<<	<<<	V/R	<<<	
Fuel level	3-13	C	C	<<<	<<<	<<<	<<<	<<<	<<<	
Fuel circuit pipes	3-16/3-39			C	<<<	<<<	<<<	<<<	<<<	P
Radiator cores	3-18	N		N	<<<	<<<	<<<	<<<	<<<	
Dry air filter cartridge	3-19/3-28	R		N	<<<	R	<<<	<<<	<<<	
Alternator/crankshaft/fan belt tension	3-18/3-25/ 3-32	C/A			C/A	R	<<<	<<<	<<<	
Cooling system	3-24	C			C	<<<	<<<	<<<	<<<	
Fuel filter	3-25	N			N	R	<<<	<<<	<<<	
Fuel filter cartridge (2)	3-19/3-28	R			N	R	<<<	<<<	<<<	
Engine oil (2)	3-13/3-33	V				V	<<<	<<<	<<<	
Engine oil filter (2)	3-33	R				R	<<<	<<<	<<<	
Fuel tank	3-34						V/N	<<<	<<<	
Safety dry air filter cartridge	3-34						R	<<<	<<<	
Engine silent blocks	3-36						C**	<<<	<<<	
Engine speeds	3-36						C**	<<<	<<<	
Valve clearances	3-38	C**					C**	<<<	<<<	
Injectors	3-38							C	<<<	
Radiator	3-38							C**	<<<	
Water pump and the thermostat	3-38							C**	<<<	
Alternator and the starter motor	3-38							C**	<<<	
Fuel injection pressure	3-38							C**	<<<	
Turbo compressor	3-38							C**	<<<	
Injection pump	3-38							C**	<<<	
TRANSMISSION										
Braking	3-14/3-32	C	C	<<<	<<<	C	<<<	<<<	<<<	
Axles	3-17	G		G	<<<	<<<	<<<	<<<	G/C**	
Universal joint bolt tightening	3-31	C			C	<<<	<<<	<<<	<<<	
Hydrostatic transmission circuit pressure	3-36						C**	<<<	<<<	
TYRES										
Condition of wheels and tyres	3-14	C	C	<<<	<<<	<<<	<<<	<<<	<<<	
Wheel nut tightening	3-21				C**	<<<	<<<	<<<	<<<	
Wheels	3-40									R
LIFTING STRUCTURE										
Telescope setting	3-21				C	<<<	<<<	<<<	<<<	
Turntable reduction gear brake / reducer	3-22/3-31				C	V/R	<<<	<<<	<<<	
Tightness of the turntable rotation motor bolts	3-30					C	<<<	<<<	<<<	
HYDRAULICS										
Hydraulic oil	3-14/3-30	C	C	<<<	<<<	V/R	<<<	<<<	<<<	
Hydrostatic transmission oil filter cartridge	3-29	R				R	<<<	<<<	<<<	
Auxiliary oil filter cartridge	3-29					R	<<<	<<<	<<<	
Condition of hoses and flexible pipes	3-30					C**	<<<	<<<	<<<	
Hydraulic circuit strainer	3-36						N	<<<	<<<	
Speeds of hydraulic movements	3-36						C**	<<<	<<<	
Condition of cylinders (leakage, rods)	3-36						C**	<<<	<<<	
Hydraulic oil tank	3-38							N	<<<	
Hydraulic circuit pressures	3-38							C**	<<<	
Hydraulic circuit outputs	3-38							C**	<<<	

647121 (20/10/2017)
MH-x 735/741/1035 LSU S6-E3

A = ADJUST, C = CHECK, G = GREASE, N = CLEAN, P = BLEED, R = REPLACE, V = DRAIN	PAGE	(1)	DAILY OR EVERY 10 HOURS OF SERVICE	EVERY 50 HOURS OF SERVICE	EVERY 250 HOURS OF SERVICE	EVERY 500 HOURS OF SERVICE OR EVERY 6 MONTHS	EVERY 1,000 HOURS OF SERVICE OR EVERY YEAR	EVERY 2,000 HOURS OF SERVICE OR EVERY TWO YEARS	EVERY 4,000 HOURS OF SERVICE	OCCASIONAL
ELECTRICITY										
Condition of the joystick bellows	3-14		C	<<<	<<<	<<<	<<<	<<<	<<<	
Battery electrolyte level	3-16	C		C	<<<	<<<	<<<	<<<	<<<	
Backup pump	3-21	C			C	<<<	<<<	<<<	<<<	
Arm position sensors	3-24	C			C	<<<	<<<	<<<	<<<	
Tilt sensor	3-24	C			C	<<<	<<<	<<<	<<<	
Battery electrolyte specific gravity	3-32	C			C	<<<	<<<	<<<	<<<	
Condition of wiring harness and cables	3-36						C**	<<<	<<<	
REAR AND FRONT AXLE										
Rear and front axle differential oil	3-20/3-35	C			C	<<<	V/R	<<<	<<<	
Rear and front wheel reduction gear oil	3-21/3-35	C			C	<<<	V/R	<<<	<<<	
CHASSIS										
Turret orientation crown gear	3-22	G			G	<<<	<<<	<<<	<<<	
Shafts	3-23				G	<<<	<<<	<<<	<<<	
Tightening of the screws that fix the axles to the chassis	3-24	C			C	<<<	<<<	<<<	<<<	
Tightness of the turntable orientation crown gear bolts	3-32	C				C	<<<	<<<	<<<	
PLATFORM										
General inspection	3-12	C	<<<	<<<	<<<	<<<	<<<	<<<	<<<	
Functional inspection	3-12	C	<<<	<<<	<<<	<<<	<<<	<<<	<<<	
Platform stickers	3-20				C	<<<	<<<	<<<	<<<	
Overload	3-26				C	<<<	<<<	<<<	<<<	
Stopping distance	3-26				C	<<<	<<<	<<<	<<<	
Platform slinging	3-41									XXX
Freewheeling	3-42									XXX
Transport of platform onto truck bed	3-42									XXX
Maintenance prop	3-43									XXX
OPTIONS										
Safe Man System	3-15	C	<<<	<<<	<<<	<<<	<<<	<<<	<<<	
ATTACHMENTS										
Pipe cradle	3-19	C		C	<<<	<<<	<<<	<<<	<<<	
Panel cradle	3-19	C		C	<<<	<<<	<<<	<<<	<<<	

(*): Every 10 hours during the first 50 hours, then once at 250 hours.
(**): Consult your dealer.

A - DAILY OR EVERY 10 HOURS OF SERVICE

A1 - GENERAL INSPECTION

CHECK

- Inspect the machine thoroughly and check that there is no weld cracking, corrosion or structural damage, loose or missing screws, hydraulic leaks, damaged control cable or loose electrical connections.

A2 - FUNCTIONAL INSPECTION

CHECK

Any platform malfunction must be detected before the platform is started up each day. Identify and remove the platform from service if a malfunction is detected.
Find a test area on a firm and even surface that is free of any obstacle.
When manoeuvring the platform (lifting, rotation, etc.), look around and above you. Pay particular attention to electrical cables and any object that may be within the access platform's field of operation.

EMERGENCY STOP
- Hold down the ground control emergency stop buttons.
> Result: the engine must stop and no functions should be active.
- Pull the red emergency stop button to the operational position and restart the engine.
- Carry out the test with the basket emergency stop button to obtain the same result.

DEAD MAN FUNCTIONS
- Without holding down the lifting validation button known as dead man, select a platform raising function.
> Result: the platform must not rise.
- Hold down the lifting validation button known as dead man and select a platform raising function.
> Result: the platform should rise.

Perform this test on the lifting, lowering turret rotation and side shift functions of the base and basket consoles in order to obtain the same result.

HORN
- Press the basket horn button
> Result: the horn should sound.

LIFTING/LOWERING FUNCTIONS
- From the base console, select all the lifting functions and then the lowering functions (arm 1/2/3 and jib).
> Result: the platform should rise and then lower.
- From the basket console, select all the lifting functions and then the lowering functions (arm 1/2/3 and jib).
> Result: the platform should rise and then lower.

STEERING
Note: when testing the steering and translation functions, position yourself in the platform so you turn in the direction of movement of the machine.
- From the basket console, select the steering control.
> Result: the steering wheels must turn in the direction controlled.

TRAVELLING AND BRAKING
- Select a travel control
> Result: the machine must move in the direction indicated by the white arrow to move forward and the black arrow to reverse and then stop when the control is released.

TRAVEL SPEED IN WORKING MODE
- Lift one or more platform arms and / or extend the telescope.
- Perform a translation movement.
> Required result: the side shift must be carried out at operating speed.

TILT SENSOR
Fold the arms for this operation.
- Place the platform in a tilt position that is more than that authorised.
> Required result: movements of extending the telescope and raising the arms must be blocked. The tilt indicator lamp comes on in the basket and the vibrating buzzer is activated intermittently in the basket.

OVERLOAD SENSORS
Fold the arms into transport position for this operation.
- Place a uniformly distributed weight of between 440 kg and 470 kg in the basket.
> Result: all the movements must be blocked. The overload indicator light is lit in the basket and the vibrating buzzer is continuously activated in the basket.

647121 (20/10/2017)
MHx735/741/1035 LSU S6-E3

A3 - ENGINE OIL LEVEL

CHECK

Set the access platform on level ground with the engine off and let the oil drain into the sump.

- Open the left-hand covers.
- Remove the dipstick 1 (Fig. A1).
- Wipe the dipstick and check the level between the two upper notches A (Fig. A1).
- If necessary, add oil (see: LUBRICANTS chapter) through the filling port 2 (Fig. A1).

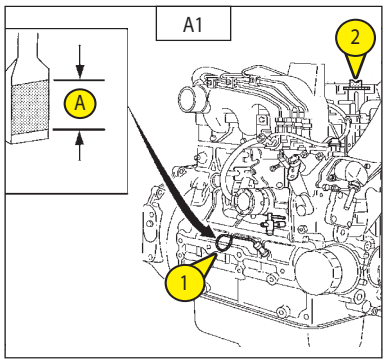

A4 - COOLANT LEVEL

CHECK

Set the access platform on level ground with the engine off and wait for the engine to cool down.

- Open the left-hand covers.

- Slowly turn the cap of the radiator 4 (Fig. A2) up to the safety stop.
- Allow the pressure and the steam to escape.
- Press down and turn the cap so as to release it.
- Add coolant via the filler port 5 (Fig. A2).
- Lubricate slightly the filler neck in order to facilitate the setting and the removal of the radiator cap.

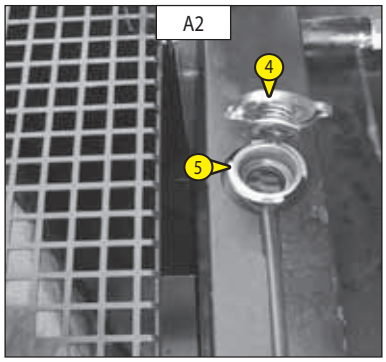

To avoid any risk of spraying or scalding, wait until the engine has cooled down before removing the cooling system filler plug. If the cooling liquid is very hot, add only hot liquid (80 °C).
In an emergency, you can use water as a coolant. In such a case, the cooling system fluid should be changed as soon as possible (see: 3 - MAINTENANCE: E1 - COOLANT).

A5 - FUEL LEVEL

CHECK

As far as possible, keep the fuel tank well filled in order to minimise condensation due to the atmospheric conditions.
- Remove the cap 1 (Fig. A3)
- Refill the fuel tank via the filling hole with clean diesel, filtered through a strainer or a clean, lint-free cloth.

Never smoke or approach with a flame during filling operations or when the tank is open. Never refill while the engine is running.

The fuel tank is degassed via the filler plug. When changing it, always use an original part with a degassing hole.

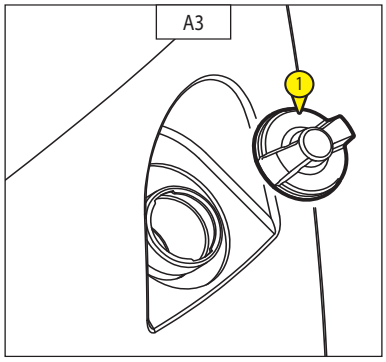

A6 - BRAKING

CHECK

Check that the cotter pins 1 (Fig. A4/1) and 2 (Fig. A4/2) are present on the rear axle.

If these cotter pins are not present, the machine no longer has any brakes.

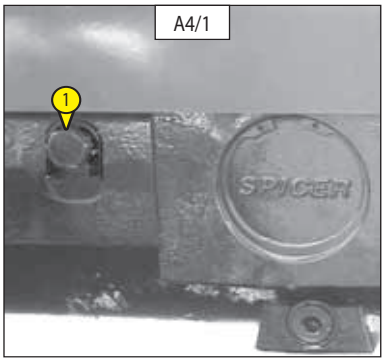

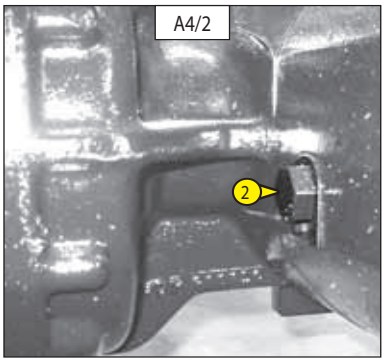

A7 - HYDRAULIC OIL LEVEL

CHECK

Put the platform in transport position on level ground with the engine stopped.
- The oil level must be in the middle of the indicator 1 (Fig. A5).
- If necessary, add oil (see: LUBRICANTS chapter) through the filling port 2 (Fig. A5).

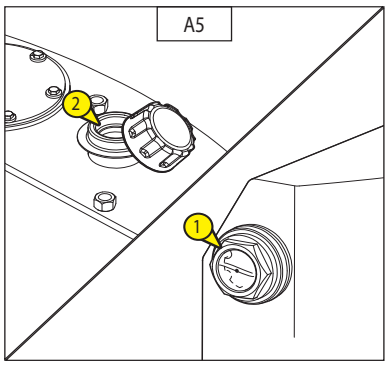

A8 - CONDITION OF JOYSTICK BELLOWS

CHECK

For this operation, get into the basket with the engine switched off.
- Check whether the rubber joystick bellows 1 are in good condition (Fig. A6) by operating them to make a movement.

The bellows must not show any crazing or cracks; risk of water penetrating and interfering with the machine's correct operation.

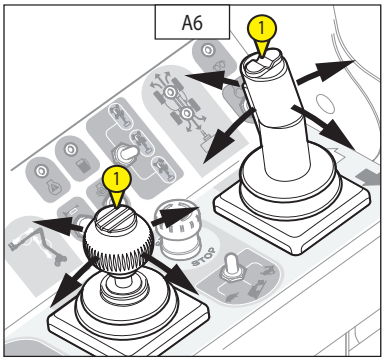

A9 - CONDITION OF WHEELS AND TYRES

CHECK

- Check the condition of the tyres, looking for signs of cuts, tears, protrusions, wear, etc.

A10 - CONDITION OF THE SAFE MAN SYSTEM (OPTION)

CHECK

Press the safety edge (Fig. A8/1) and check:
> That all the platform movements stop.
> Operation of the flashing blue light and horn.
> Operation of the platform's movements when you press the OFF button (Fig. A8/2) once.

If the safety edge is faulty, the blue flashing light will flash quickly and a special beep will be activated. The machine can continue to operate normally however.

If the OFF reset button is not working correctly, use the emergency stop to reset the platform.

If the option is malfunctioning, please contact your dealer.

A8/1

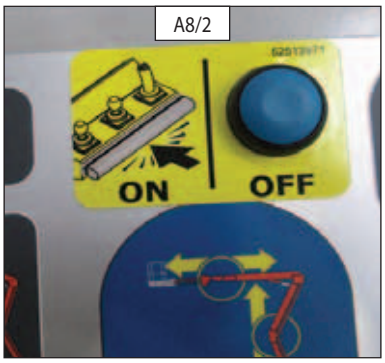

A8/2

B - EVERY 50 HOURS OF SERVICE

Carry out the operations described previously as well as the following operations.

B1 - BATTERY ELECTROLYTE LEVEL

CHECK

Check the electrolyte level in each cell of the battery.
If the ambient temperature is high, check the level more frequently than every 50 hours of service.

- Undo the two nuts on the battery cover.
- Remove the battery cover 1 (fig. B1/1).
- Release the two shutters 2 (Fig. B1/2) from the cells.
- The level must be 1 cm above the top of the plates in the battery.
- If necessary, top up with clean distilled water, kept in a glass container.
- Clean and dry the two shutters 2 (fig. B1/2) and replace.
- Check the battery terminals and apply Vaseline to prevent them corroding.
- Reposition the battery cover.
- Replace the two nuts on the battery cover.

Handling and servicing a battery can be dangerous, take the following precautions:
- Wear protective goggles.
- Keep the battery horizontal.
- Never smoke or work near a naked flame.
- Work in a well-ventilated area.
- In the event of electrolyte being spilled onto the skin or splashed in the eyes, rinse thoroughly with cold water for 15 minutes and call a doctor.

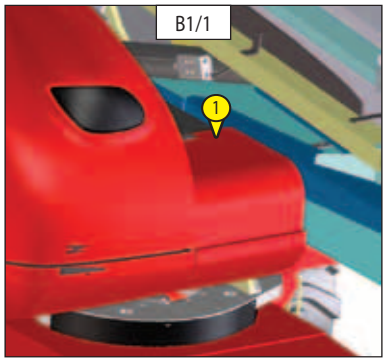

B1/1

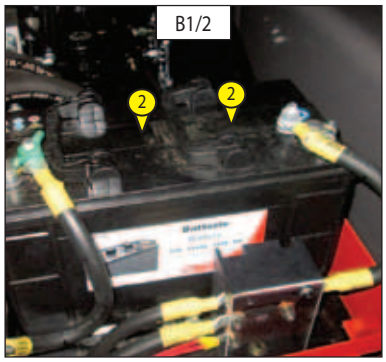

B1/2

B2 - FUEL CIRCUIT PIPES

CHECK

Set the platform on level ground with the engine off and wait for the engine to cool.

Check the condition of the fuel circuit pipes after turning off the engine. Damaged fuel feed pipes can cause fires.

- Open the bonnet.
- Visually inspect the condition of the fuel circuit feed pipes and the clamps. If these are damaged, replace them immediately (replace all of the fuel pipes and the clamps at least every two years).

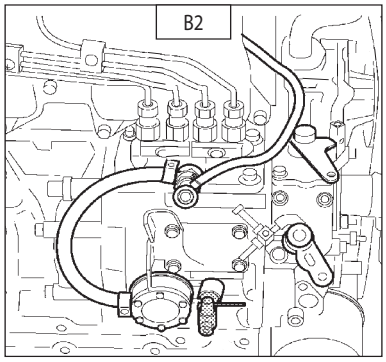
B2

B3 - AXLES

GREASE

- The oilers of the front and rear wheel reduction gear pivots 1 (Fig. B3/1) and 2 (Fig. B3/2) (8 oilers)

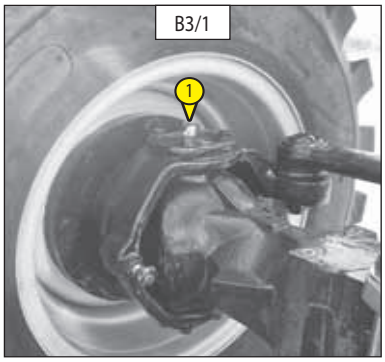

B3/1

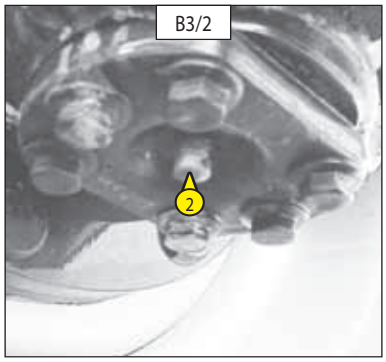

B3/2

- The oilers of the front axle oscillation axis 3 (Fig. B3/3) and 4 (Fig. B3/4) (2 oilers).

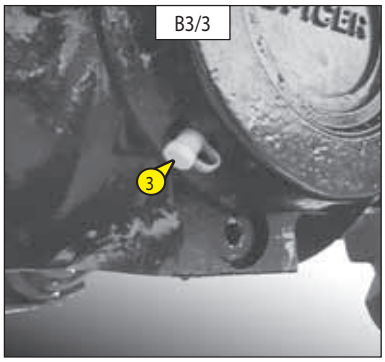

B3/3

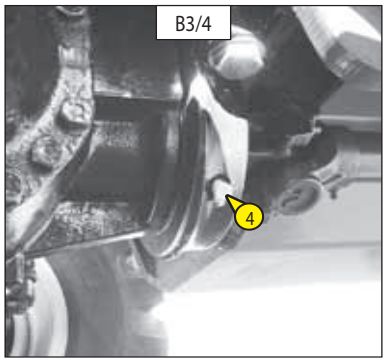

B3/4

- The oilers of the transmission universal joint: front axle 5-6 (Fig. B3/5) and transfer box/rear axle 7 (Fig. B3/6).

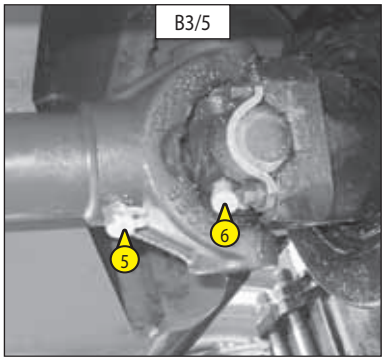

B3/5

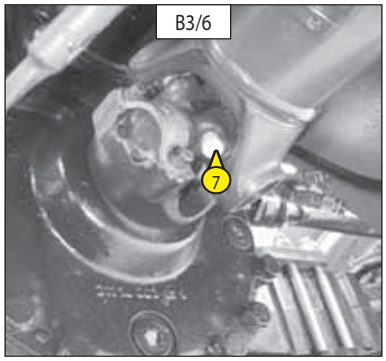

B3/6

B5 - ALTERNATOR/FAN/CRANKSHAFT BELT TENSION

ADJUST

- Open the left-hand covers.
- Check the belt for signs of wear and cracks and change if necessary (see 3 - MAINTENANCE: FILTER CARTRIDGES AND BELTS).
- Check the tension between the crankshaft and alternator pulleys.
- Pressing with your thumb (98 N), the tension A (Fig. B5/1) should be between 7 and 9 mm (Fig. B5/1).
- Adjust if necessary.
- Loosen screws 1 (Fig. B5/2) by two to three turns.
- Swivel the alternator assembly so as to obtain the belt tension required.
- Retighten screws 1 (fig. B5/1).

If the alternator belt has to be changed, check the tension again after the first 20 hours of operation.

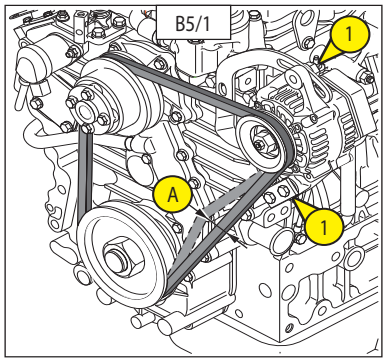

B5/1

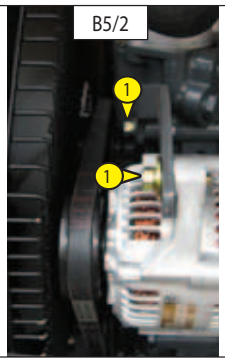

B5/2

B6 - RADIATOR CORE

CLEAN

- Open the bonnet.

In order to prevent the radiator becoming clogged, clean it with a compressed air jet directed from front to back (Fig. B6). This is the only effective way of removing impurities.

Clean the radiator core on a daily basis when the access platform is being used in a very dusty area.

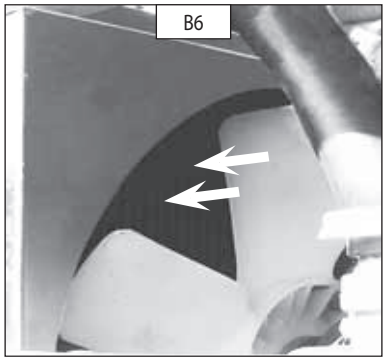
B6

B7 - DRY AIR FILTER CARTRIDGE

CLEAN

If the platform is being used in a very dusty atmosphere, reduce this interval and see the FILTER CARTRIDGES AND BELTS chapter.
- Open the left-hand covers.
- Unclip the cover 1 (Fig. B7/1).
- Release the filter cartridge 2 (Fig. B7/2) by pulling it.
- Leave the safety cartridge 3 in place (Fig. B7/2).
- Clean the filter cartridge only from the inside towards the outside with a jet of compressed air.

Respect the safety distance of 30 mm between the air jet and the cartridge to avoid tearing or making a hole in the cartridge. The cartridge must not be blown anywhere near the air filter box. Never clean the cartridge by tapping it against a hard surface. Your eyes must be protected during this intervention.

- Clean the inside of the filter with a clean, damp, lint-free cloth.
- Check the condition of the filter cartridge and replace it if necessary.
- Then refit the cartridge and the cover.

Never clean the dry air filter cartridge by washing it in liquid. Do not clean by any means the safety cartridge located inside the filter cartridge, change it for a new one if it is clogged or damaged.

B7/1

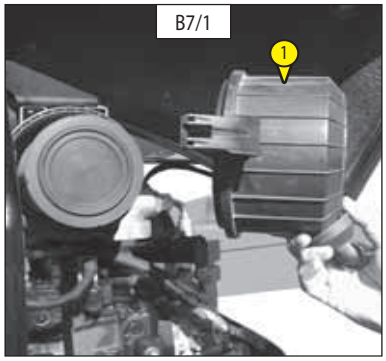

B7/2

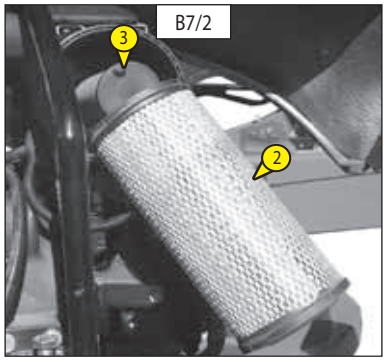

B8 - FUEL FILTER CARTRIDGE

REPLACE

- Open the left-hand covers.
- Carefully clean the outside of the filter and its holder to prevent dust from getting into the system.
- Close the fuel valve 1 (Fig. B8/1) in the OFF position.
- Unscrew the retaining ring 2, remove the housing 3 (Fig. B8/2) and clean the inside using a brush immersed in clean diesel oil.
- Discard the filter cartridge 4 (Fig. B8/2).
- Refit the assembly with a new cartridge (see: 3 - MAINTENANCE: FILTER CARTRIDGES AND BELTS).

B8/1

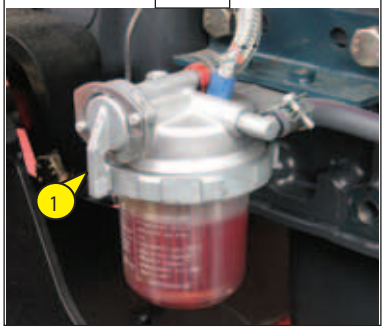

B8/2

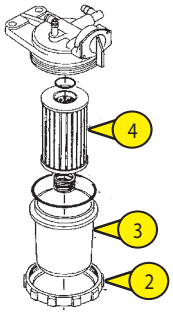

B9 - CONDITION OF PIPE CRADLE (ATTACHMENT)

CHECK

Check the general condition of the components, the conformity of the installation and the tightening torques (see: 4 - ATTACHMENTS: PIPE CRADLE).

B10 - CONDITION OF PANEL CRADLE (ATTACHMENT)

CHECK

Check the general condition of the components, the conformity of the installation and the tightening torques (see: 4 - ATTACHMENTS: PANEL CRADLE).

C - EVERY 250 HOURS OF SERVICE

C1 - FRONT AND REAR AXLE DIFFERENTIAL OIL LEVEL

CHECK

Set the platform on level ground with the engine stopped.

DIFFERENTIAL:
- Remove the cap 1 (Fig. C1/1). The oil level should be flush with the hole.
- If necessary, add oil (see: LUBRICANTS chapter) through the same hole.
- Refit and tighten the plug 1 (Fig. C1/1) (tightening torque 60 N.m)

AXLES:
- Remove the level plug 2 (Fig. C1/2: front axle) (Fig. C1/3: rear axle). The oil should be flush with the hole.
- If necessary, add oil (see: LUBRICANTS chapter) through the same hole.
- Refit and tighten the level plug 2 (Fig. C1/2: front axle) (Fig. C1/3: rear axle) (tightening torque 60 N.m)

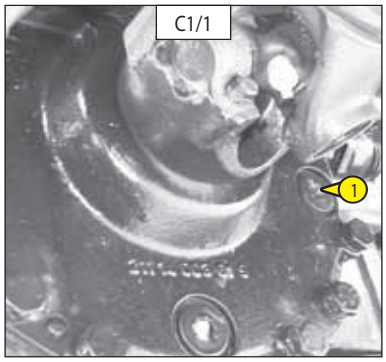

C1/1

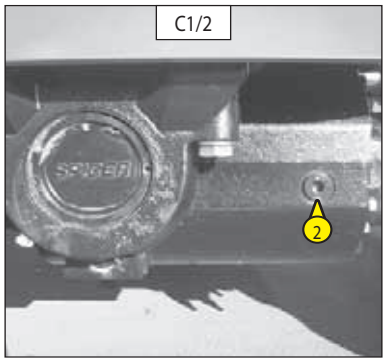

C1/2

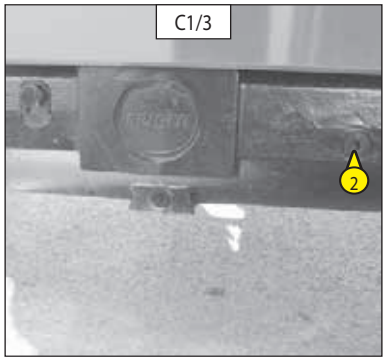

C1/3

C2 - MACHINE STICKERS

CHECK

- Check that the safety decals are in place (see: 1 - SAFETY STICKERS).

C3 - FRONT AND REAR WHEEL REDUCTION GEAR OIL LEVEL

CHECK

Set the platform on level ground with the engine stopped.

- Check the level on each front wheel reducer.
- Place level plug 1 (Fig. C3) in the horizontal position.
- Remove the level plug, the oil should be flush with the edge of the hole.
- If necessary, add oil (see: LUBRICANTS chapter) through the same hole.
- Replace and tighten the level plug 1 (Fig. C3) (tightening torque 80 N.m).
- Repeat this operation on each rear wheel reduction gear.

C3

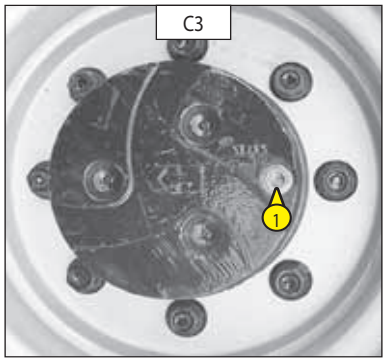

C4 - WHEEL NUTS TORQUE

CHECK

- Check wheel nut tightening (Fig. C4).

Failure to observe this instruction may cause the wheel studs to be damaged or broken, and the wheels to be deformed.

C4

WHEEL NUT TIGHTENING TORQUES	
FRONT WHEELS	340 N.m ± 34 N.m
REAR WHEELS	340 N.m ± 34 N.m

C5 - BACKUP PUMP

CHECK

- Switch off the engine.

Check that the backup pump is working correctly by pressing the switch on the side of the base control box or the one on the basket control box.
- Perform an arm lowering movement (for example)

You must never use the lifting platform under any circumstances if the pump is not working.

C6/1

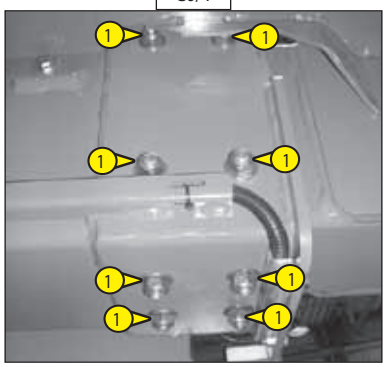

C6 - TELESCOPE SETTING

CHECK

- Check the tightening of the 16 nuts on the telescope pads 1 (Fig. C6/1 and C6/2).

Failure to comply with this instruction may lead to loss of the pads and damage to the telescope.

C6/2

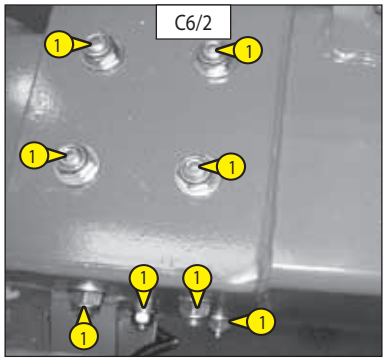

C7 - TURNTABLE REDUCTION GEAR BRAKE/REDUCER LEVEL

CHECK

Set the platform on level ground with the engine stopped.

- Remove the interior cowl from the turntable.
- The reduction gear is presented with the valve block to the rear.
- Remove the filling-breather cap 1 (Fig. C7)
- The level is correct when the breather is full of oil.
- If necessary, top up with a syringe, filling the reduction gear through the filling-breather cap. The oil capacity is 1.3 L.
- Refit the filling-breather cap 1 (Fig. C7).

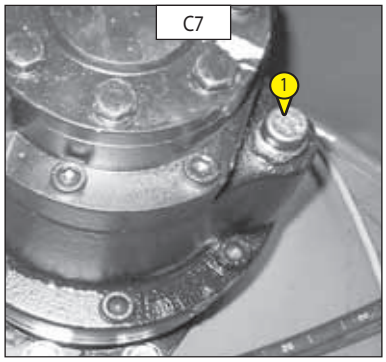

C7

C8 - TURNTABLE ORIENTATION CROWN GEAR

GREASE

- The bearing raceways must be greased and the teeth lubricated every 250 operating hours, as well as before and after a long period at a standstill.
- Lubricant to use: see LUBRICANTS chapter.
- Remove the left-hand sump from the chassis (see: Fig. C8/1).
- Access the 2 oilers 1 (Fig. C8/2) and thoroughly grease the crown gear by positioning the turntable.
- Replace the left-hand sump on the chassis (see: Fig. C8/1).

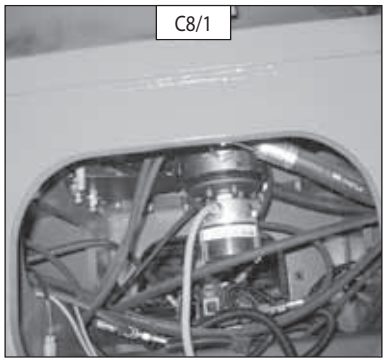
C8/1

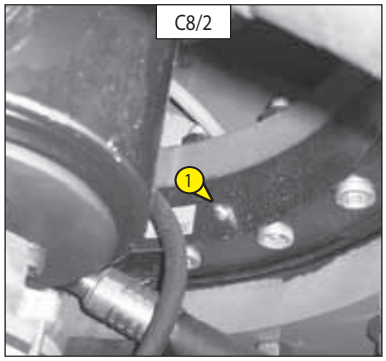

C8/2

- Use a brush to apply lubricant to the crown and pinion teeth (Fig. C8/3).
- Lubricant to use: see LUBRICANTS chapter.

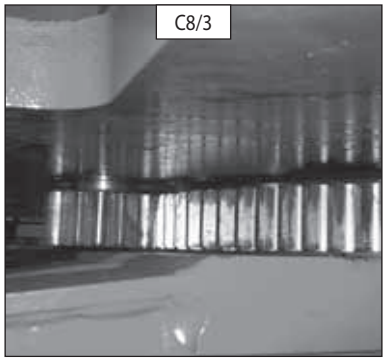
C8/3

C9 - SHAFTS

GREASE

- Clean and then lubricate the following points with grease (see: the LUBRICANTS chapter) and remove any surplus.

Key:

SHAFT

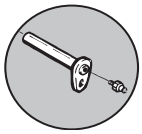

HUB

BALL JOINT

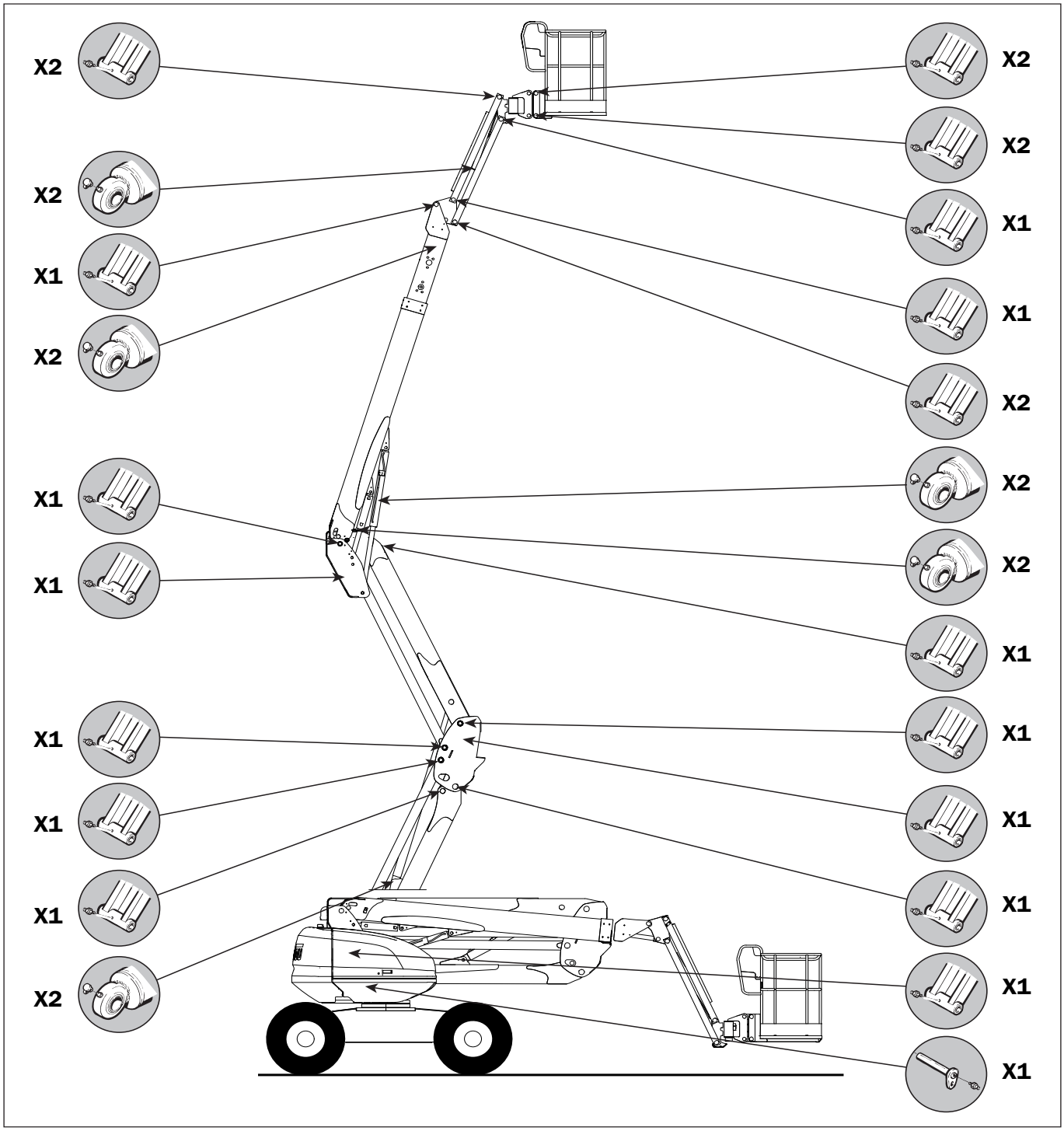

647121 (20/10/2017)
Mlt-x 735/741/1035 LSU S6-E3

C10 - TIGHTENING OF THE SCREWS THAT FIX THE AXLES TO THE CHASSIS

CHECK

- The tightening of the screws should be checked at the latest after 50 hours of service. Then the check should be repeated every 250 hours of service.
- The tightening torque for the bolts is 285 N.m ± 28 N.m

C11 - ARM POSITION SENSORS

CHECK

Fold the arms into transport position for this operation.
- Make a translation movement at transport speed
- Raise the arms or extend the telescope
- Move forwards
- The access platform must switch to operating speed.

The platform must not be used in the event of a malfunction. Contact your dealer.

C12 - TILT SENSOR

CHECK

Fold the arms for this operation.
- Place the platform in a tilt position that is more than that authorised (see: 2 - DESCRIPTION: SPECIFICATIONS).
- The movements of extending the telescope and raising the arms must be blocked (the tilt indicator lamp comes on in the basket and the vibrating buzzer is activated intermittently in the basket).

The platform must not be used in the event of a malfunction. Contact your dealer.

C13 - COOLING CIRCUIT PIPES

CHECK

Damage to the cooling system pipes or coolant leaks can cause overheating or serious burns.

- Open the bonnet.
- Visually inspect the condition of the cooling circuit pipes and the clamps. If these are blistered, hardened or cracked, replace them immediately (replace all of the cooling circuit pipes and the clamps at least every two years). (Contact your dealer.)

C14 - FUEL FILTER

CLEAN

- Set the platform on level ground with the engine stopped.
- Open the left-hand covers.
- Close the fuel valve 1 (Fig. C14/1) in the OFF position.
- Carefully clean the outside of the filter and its holder to prevent dust from getting into the system.
- Unscrew the retaining ring 2, remove the housing 3 (Fig. C14/2) and clean the inside using a brush immersed in clean diesel oil.
- Remove the cartridge filter 4 (fig. C14/2) and dip in diesel oil to rinse.
- Reassemble the unit.
- Open the fuel valve 1 (fig. C14/1) in the ON position.
- Bleed the fuel circuit (see: 3 - MAINTENANCE: G1 - FUEL SYSTEM).

Dust and impurities in the fuel will cause the injection pump and injectors to wear more quickly. To avoid this, regularly clean the fuel filter housing.

C14/1

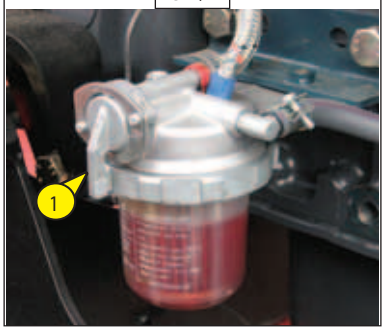

C14/2

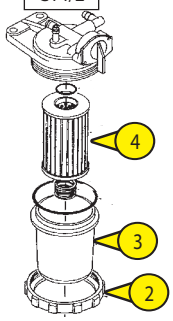

C15 - ALTERNATOR/FAN/CRANKSHAFT BELT TENSION

ADJUST

- Open the left-hand covers.
- Check the belt for signs of wear and cracks and change if necessary (see: 3 - MAINTENANCE: FILTER CARTRIDGES AND BELTS).
- Check the tension between the crankshaft and alternator pulleys.
- Pressing with your thumb (98 N), the tension A (Fig. C15/1) should be between 7 and 9 mm (Fig. C15/1).
- Adjust if necessary.
- Loosen screws 1 (fig. C15/2) by two to three turns.
- Swivel the alternator assembly so as to obtain the belt tension required.
- Retighten screws 1 (fig. C15/1).

If the alternator belt has to be changed, check the tension again after the first 20 hours of operation.

C15/1

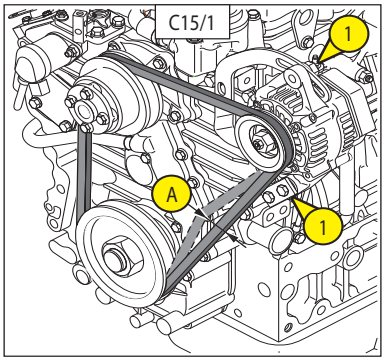

C15/2

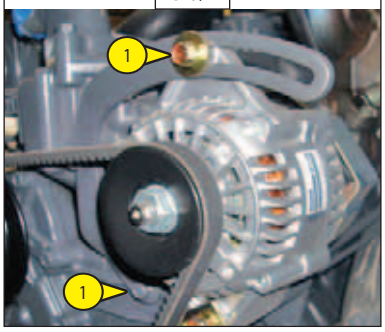

C16 - OVERLOAD

CHECK

The PIPE CRADLE or PANEL CRADLE attachments must be removed before checking the overload, see 4 - ATTACHMENTS.

- Switch on the engine.
- Place the platform in the transport position.
- Place a uniformly distributed weight of 440 kg in the basket.

Result:
- The overload alarm should go off.
- It should not be possible to activate the controls.

- Remove 40 kg of the load (400 kg remaining).

Result:
- The overload alarm should stop.
- It should be possible to activate the controls.

- Remove the whole load.
- Switch off the engine.

The platform must not be used in the event of a malfunction. Contact your dealer.

C17 - STOPPING DISTANCE

CHECK

Note: the PIPE CRADLE or PANEL CRADLE attachments must be removed.

- Switch on the engine.
- Place a uniformly distributed weight in the basket:
  - Place 400 kg less the operator's weight.

Stopping distance on level ground

- Drive forward, reach the maximum speed and then release the joystick to stop the platform.

Required results:

	Stopping distance
Transport speed	1,400 mm ± 300 mm
Working speed	160 mm ± 50 mm

Checking the brakes on a slope

- Place the platform in the transport position.
- Move platform to a 25% slope.
- Stop the platform on the slope.
- Switch off the engine.

Result:
- The platform must not have moved back after one minute.

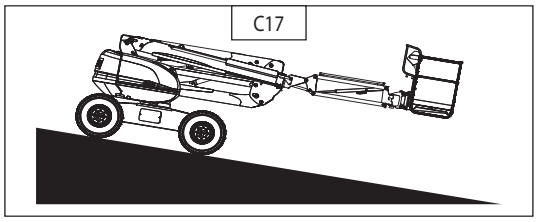

647121 (20/10/2017)
Mlt-x 735/741/1035 LSU S6-E3

D - EVERY 500 HOURS OF SERVICE

D1 - DRY AIR FILTER CARTRIDGE

REPLACE

The air used for combustion is purified by a dry air filter. It is therefore prohibited to use the platform with a cartridge that has been removed or damaged.

- Open the left-hand covers.
- Release the clips 1 (Fig. D1/1) and remove the cover 2 (Fig. D1/1).
- Carefully remove the cartridge 3 (fig. D1/2), taking care to avoid spilling the dust.
- Leave the safety cartridge in place.
- The following parts must be cleaned with a damp, clean lint-free cloth.
  - The inside of the filter and cover.
  - The inside of the filter inlet hose.
  - The gasket surfaces in the filter and in the cover.
- Check the pipes and connections between the air filter and the engine and the connection and condition of the clogging indicator on the filter.
- Before mounting check the state of the new cartridge (see: 3 - MAINTENANCE: FILTER CARTRIDGES AND BELTS).
- Introduce the cartridge into the filter axis and push it in, pressing the edges and not the middle.
- Refit the cover, guiding the valve downwards.

If the platform is being used in a very dusty atmosphere, see the FILTER CARTRIDGES AND BELTS chapter

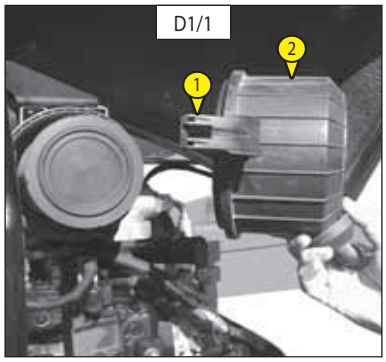

D1/1

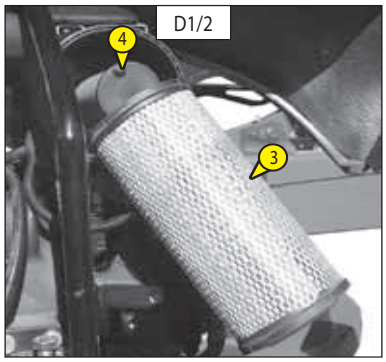

D1/2

D2 - FUEL FILTER CARTRIDGE

REPLACE

- Open the left-hand covers.
- Carefully clean the outside of the filter and its holder to prevent dust from getting into the system.
- Close the fuel valve 1 (fig. D2/1) in the OFF position.
- Unscrew the retaining ring 2, remove the housing 3 (fig. D2/2) and clean the inside using a brush immersed in clean diesel oil.
- Discard the filter cartridge 4 (fig. D2/2).
- Refit the assembly with a new cartridge (see: 3 - MAINTENANCE: FILTER CARTRIDGES AND BELTS).

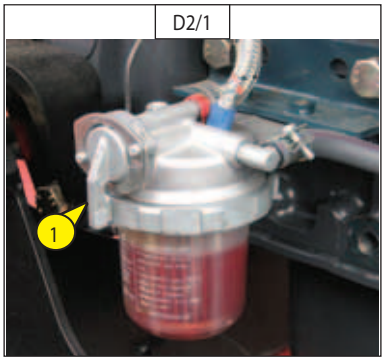

D2/1

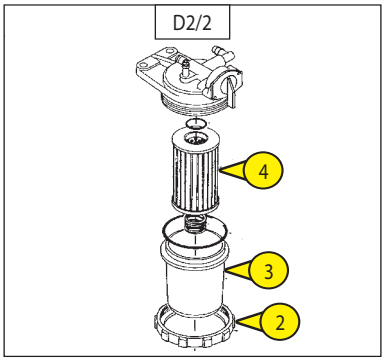

D2/2

D3 - HYDROSTATIC TRANSMISSION OIL FILTER CARTRIDGE

REPLACE

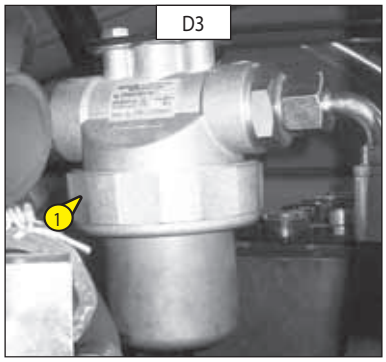

REPLACING THE HYDROSTATIC TRANSMISSION OIL FILTER CARTRIDGE

- Switch off the engine.
- Lift up the engine hood.
- Unscrew the body of the filter 1 (Fig. D3).
- Remove the hydrostatic transmission oil filter cartridge and replace it with a new one.
- Make sure that the cartridge is correctly positioned and refit the cover.

Do not operate the platform without the cartridge in place as this would immediately damage the hydraulic transmission system and the hydrostatic pump.

HYDRAULIC CIRCUIT DECONTAMINATION

- Let the engine run for 5 minutes without using the platform.

D4 - AUXILIARY HYDRAULIC OIL FILTER CARTRIDGE

REPLACE

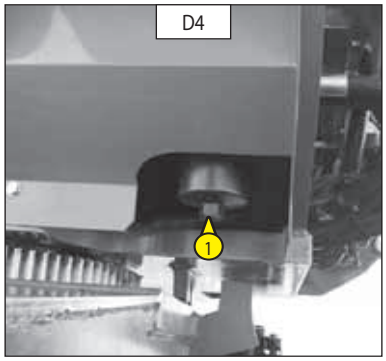

- Machine stopped, battery disconnect in OFF position.
- Unscrew the filter body 1 (Fig. D4).
- Remove the filter cartridge and replace it with a new one. (see: FILTER CARTRIDGES chapter).

NOTE: Note the direction of assembly.

- Refit the filter body 1 (Fig. D4).

Thoroughly clean the outside of the filter and its surroundings before any operation to prevent any risk of polluting the hydraulic system.

D5 - HYDRAULIC OIL

DRAIN - REPLACE

- Set the platform on level ground in transport position with the engine stopped.

DRAINING THE OIL

- Place a container under draining port 1 (Fig. D5/1) and loosen the clamp 2 (Fig. D5/1).
- Remove the drain plug 1 (Fig. D5/1).
- Remove the filling cap 3 (Fig. D5/2) to assist draining.

CLEANING THE SIEVE

- Remove the sieve 5 (Fig. D5/2) by pulling it upwards and clean it using a compressed air jet.
- Refit the sieve.

FILLING WITH OIL

Use a very clean container and funnel and clean the top of the oil can before filling.

- Refit and tighten the drain plug 1 (Fig. D5/1).
- Fill with hydraulic oil (see: the LUBRICANTS chapter) via the filling hole 4 (Fig. D5/2).
- The oil level must be over the red spot on the dipstick 6 (Fig. D5/3).

Dispose of the drain oil in an ecological manner.

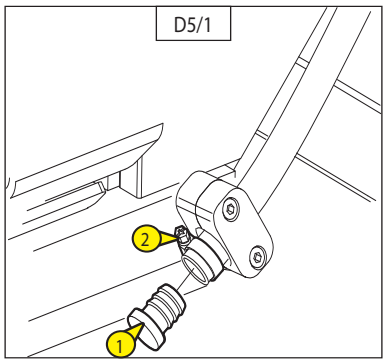

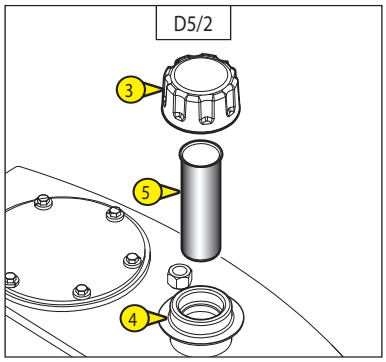

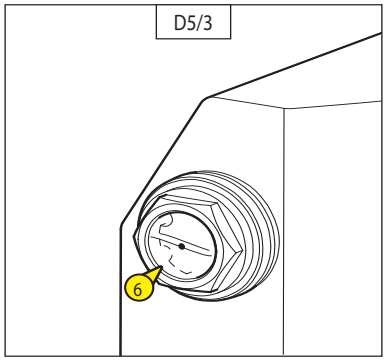

D6 - CONDITION OF HOSES

CHECK

- Check the visible condition (cracks) of the hoses. When subjected to thermal stress and UV, their technical properties can be affected (porosity).

BEWARE OF LEAKS
Hydraulic fluid escaping under high pressure may pierce the skin and cause serious injury.
In the event of injury due to a pressurised liquid jet, consult a doctor immediately.
If there is any doubt about a possible leak, do not search for it by hand. Check using a piece of cardboard while protecting your hands and body.
For your safety, replace worn hoses.

D7 - TIGHTNESS OF TURNTABLE ROTATION MOTOR BOLTS

CHECK

Set the platform on level ground with the engine stopped.

- Check the tightness of the nine bolts 1 (Fig. D7).
- The tightening torque for the bolts is 80 N.m ± 8 N.m

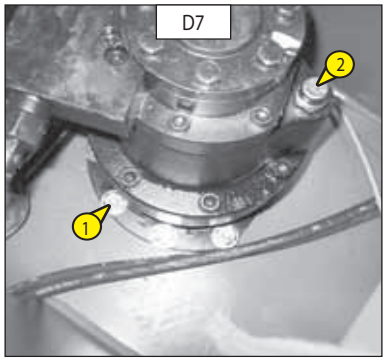

647121 (20/10/2017)
Mlt-x 735/741/1035 LSU S6-E3

D8 - TURNTABLE REDUCTION GEAR BRAKE/REDUCER

DRAIN - REPLACE

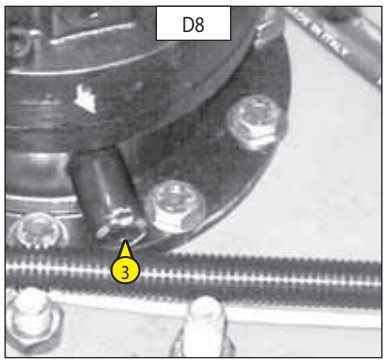

D8

Set the platform on level ground with the engine stopped.

- Remove the interior cowl from the turntable.
- The reduction gear is presented with the valve block to the rear.
- Remove the filling-breather cap 2 (Fig. D7) to ensure proper drainage.
- Locate the drain plug 3 located on the right-hand side of the reduction unit's sole plate (Fig. D8).
- Place a (small) receptacle to retrieve the oil.
- Unscrew the drain plug.

Dispose of the drain oil in an ecological manner.

- Use a syringe to fill the reduction gear through the filling-breather cap 2 (Fig. D7). The oil capacity is 1.3 L and the level is correct when the breather is full of oil.
- Refit the filling-breather cap 2 (Fig. D8).

D9 - UNIVERSAL JOINT BOLT TIGHTENING

CHECK

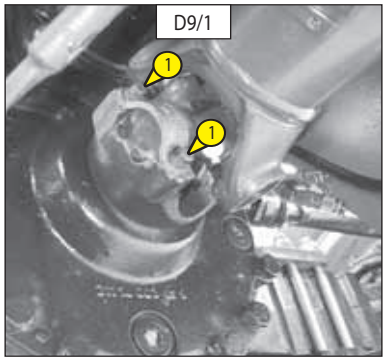

D9/1

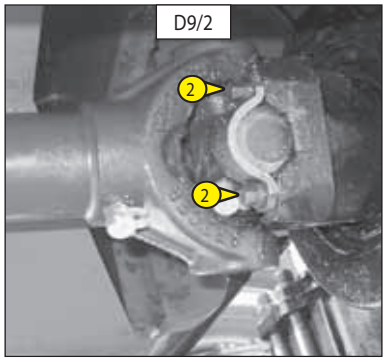

D9/2

Set the platform on level ground with the engine stopped.

- Check tightening of the eight bolts (four at each end) 1 (Fig. D9/1) and 2 (Fig. D9/2).
- The tightening torque for the bolts is 80 N.m ± 8 N.m

D10 - BATTERY ELECTROLYTE SPECIFIC GRAVITY

CHECK

The electrolyte's specific gravity varies in accordance with the temperature but a minimum value of 1,260 at 16°C must be maintained.
Within the hatched area (Fig. D10), the battery is normally charged.
Above the hatched area, the battery should be recharged.
The specific gravity must not vary by 0.025 units from one battery cell to another.

- Open the battery cover.
- Check the electrolyte specific gravity in each battery cell using a hydrometer.
- Never carry out this check immediately after topping up with distilled water. Recharge the battery and wait at least one hour before checking the battery electrolyte specific gravity.

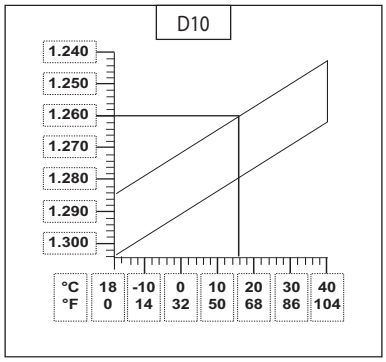

Handling and servicing a battery can be dangerous, take the following precautions:
- Wear protective goggles.
- Keep the battery horizontal.
- Never smoke or work near a naked flame.
- Work in a well-ventilated area.
- In the event of electrolyte being spilled onto the skin or splashed in the eyes, rinse thoroughly with cold water for 15 minutes and call a doctor.

D11 - TIGHTNESS OF THE TURNTABLE ORIENTATION CROWN GEAR BOLTS

CHECK

- The tightening of the screws should be checked at the latest after 50 hours of service. Then the check should be repeated every 500 hours of service.
- The tightening torque for the bolts is 270 N.m ± 27 N.m

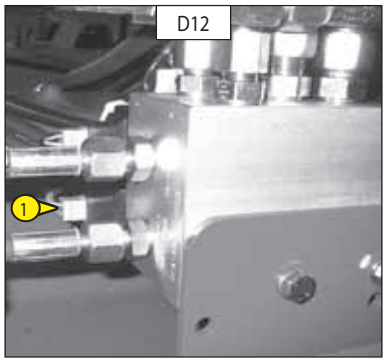

D12 - BRAKING

CHECK

- Check the braking system by disconnecting the coil 1 (Fig. D12) from the hydraulic block in the chassis (to access the block, remove the left-hand sump on the chassis) and perform a translation movement.

The platform must not move.

- Upon completing the test, reconnect the coil.

D13 – ALTERNATOR/FAN/CRANKSHAFT BELT

REPLACE

- Open the left-hand covers.
- Undo screws 1 (Fig. D13) by two to three turns.
- Swivel the alternator assembly so as to free the belt and replace with a new one (see: 3 - MAINTENANCE: FILTER CARTRIDGES AND BELTS).
- Adjust the belt tension between the crankshaft and alternator pulleys.
- Pressing with your thumb (98 N), the tension should be between 7 and 9 mm (A-Fig. D13)
- Retighten the screws 1 (Fig. D13).

Check the belt tension again after the first 20 hours of operation.

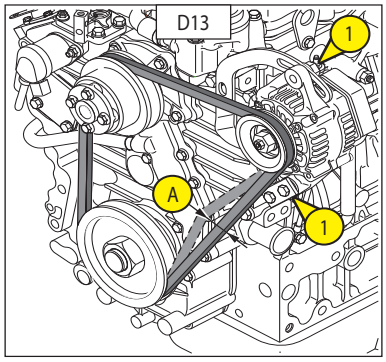

D14 - ENGINE OIL

DRAIN - REPLACE

D15 - ENGINE OIL FILTER

REPLACE

- Set the access platform on a horizontal surface, leave the engine idling for a few minutes and then switch it off.

DRAINING THE OIL

- Open the left-hand covers.
- Place a container on the floor
- Remove the filler cap 2 (Fig. D15/2) in order to ensure that the oil is drained properly.
- Once drainage is complete, retighten the cap

Dispose of the drain oil in an ecological manner.

REPLACEMENT OF THE FILTER

- Remove the engine oil filter 3 (Fig. D15/3); discard the filter and the filter seal.
- Clean the filter bracket with a clean, lint-free cloth.
- Lightly oil the new seal.
- Fit the oil filter onto its holder.

Tighten the oil filter by hand only and lock the filter in place by a quarter turn using a filter key.

FILLING WITH OIL

- Make sure that you replace and tighten the plug 1 (Fig. D15/1)
- Fill with oil (see: the LUBRICANTS chapter) via the filling hole 2 (Fig. D15/2).
- Wait a few minutes to allow the oil to flow into the sump.
- Check the level with the dipstick 4 (Fig. D15/4).
- Start the engine and let it run for a few minutes.
- Check for possible leaks at the drain plug and the oil filter.
- Stop the engine, wait a few minutes and check the level between the two notches on the dipstick A (Fig. D15/4).
- Top up if necessary.

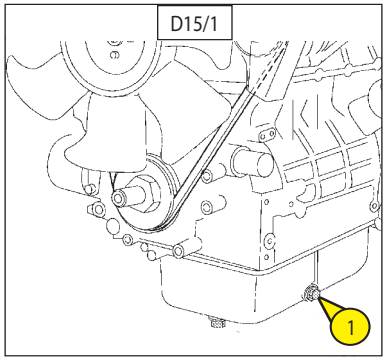

D15/1

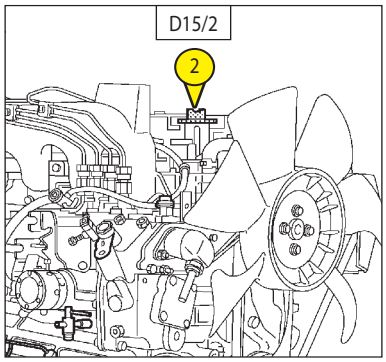

D15/2

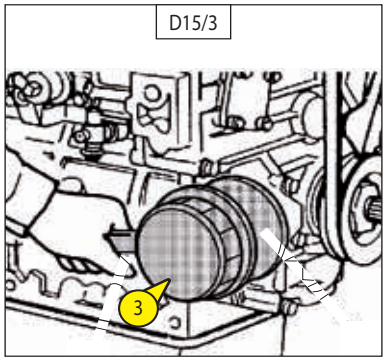

D15/3

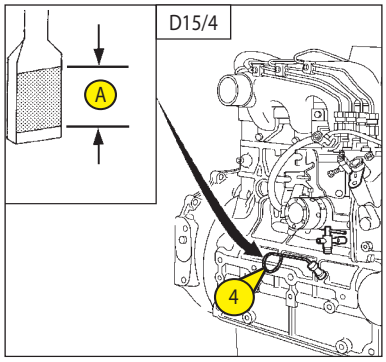

D15/4

E - EVERY 1,000 HOURS OF SERVICE

E1 - FUEL TANK

DRAIN - CLEAN

Never smoke or approach the tank with a naked flame during these operations.

Place the machine on level ground, perform a 90° rotation (so that the drain plug is not over the chassis) and switch off the engine.
- Inspect the parts likely to show leaks on the fuel circuit and the fuel tank visually and by touch.
- In the event of a leak, please contact your dealer.

Never try to carry out a weld or any other operation by yourself as this could cause an explosion or fire.

- Place a container under drain plug 1 (Fig. E1/1) and unscrew the plug.
- Let the diesel flow and clean with ten litres of clean diesel via the filler port 2 (Fig. E1/2).
- Refit and tighten drain plug 1 (Fig. E1/1) (tightening torque 30 to 40 N.m).
- Fill the fuel tank with clean diesel filtered through a strainer or a clean, lint-free cloth and refit the filler plug (Fig. E1/2).

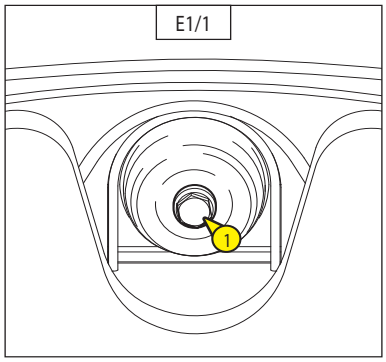

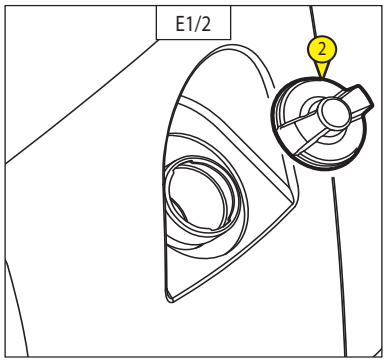

E2 - DRY AIR FILTER SAFETY CARTRIDGE

REPLACE

- Open the left-hand covers.
- Remove the dry air filter cartridge 1 (see: § D1).
- Remove the dry air filter safety cartridge 1 (Fig. E2) and replace it with a new one.
- Refit the unit (see: § D1).

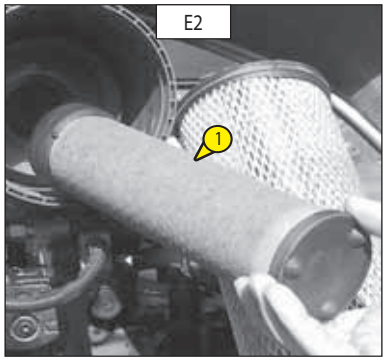

E3 - FRONT AND REAR AXLE DIFFERENTIAL OIL

DRAIN - REPLACE

Place the platform on level ground with the engine stopped and the differential oil still warm.

- Place a receptacle under the drain plugs 1 (Fig. E3/1: front axle) (Fig. E3/2: rear axle).
- Remove the level and filling plug 2 (Fig. E3/1: front axle) (Fig. E3/2: rear axle) to ensure that the oil is drained properly.
- Place a container under the drain plug 3 and remove the level and filling plug 4 (Fig. E3/3: differential).

Dispose of the drain oil in an ecological manner.

- Refit and tighten the drain plugs 1 (Fig. E3/1: front axle (Tightening torque 80 N.m)) (Fig. E3/2: rear axle (Tightening torque 80 N.m)) and (Fig. E3/3: differential (Tightening torque 80 N.m))
- Top up with oil (see: LUBRICANTS chapter) via the filler port 2 (Fig. E3/1: front axle) (Fig. E3/2: rear axle) and 4 (Fig. E3/3: differential).
- The level is correct when the oil level is flush with the edge of the hole.
- Check for any possible leaks from the drain plugs.
- Refit and tighten the level and filling plug 2 (Fig. E3/1: front axle) (Fig. E3/2: rear axle) and 4 (Fig. E3/3: differential) (Tightening torque 60 N.m).

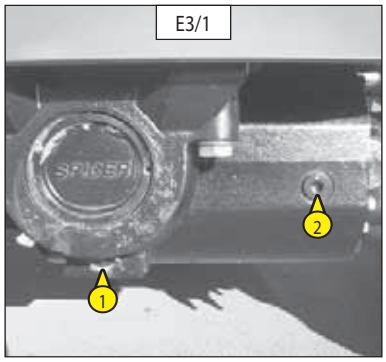

E3/1

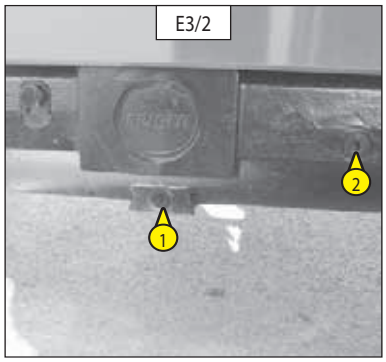

E3/2

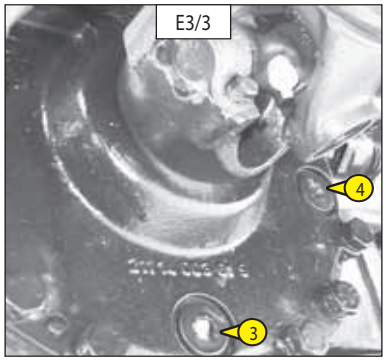

E3/3

E4 - FRONT AND REAR WHEEL REDUCTION GEAR OIL

DRAIN - REPLACE

Place the platform on level ground with the engine stopped and the gearbox oil still warm.

- Drain and change the oil for each front wheel reduction gear.
- Place drain plug 1 (Fig. E4) in position A.
- Place a container under the drain plug and unscrew the plug.
- Let the oil drain fully.

Dispose of the drain oil in an ecological manner.

- Place the drain port in position B, i.e. in a level port.
- Fill with oil (see: the LUBRICANTS chapter) via the filling hole 1 (Fig. E4).
- The level is correct when the oil level is flush with the edge of the hole.
- Refit and tighten the drain plug 1 (Fig. E4) (Tightening torque 80 N.m).
- Repeat this operation on each rear wheel reduction gear.

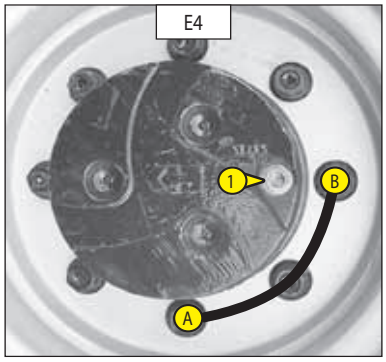

E4

E5 - HYDRAULIC CIRCUIT STRAINER

CLEAN

- Drain the oil (see: § D15)
- Unscrew the six fastening screws 1 (Fig. E5/1) from the closure plate 2 (Fig. E5/1).
- Unscrew the strainer 3 (Fig. E5/2) in the tank and clean it using a compressed air jet.
- Refit the strainer in the tank and refit the closure plate 2 (Fig. E5/1).
- Top up with hydraulic oil (see: § D6) (see: LUBRICANTS chapter).

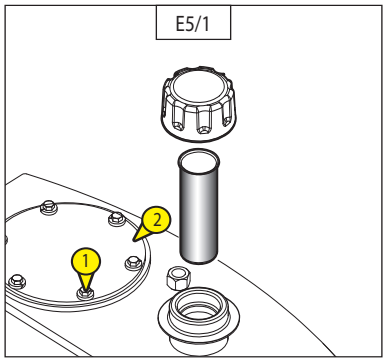

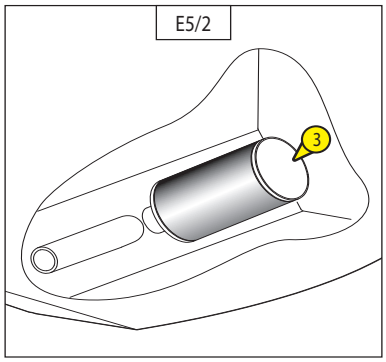

E6 - CONDITION OF CYLINDERS (LEAKAGE, RODS)

CHECK

- Check the condition of the cylinders. Make sure there are no:
• Hydraulic leaks from the seals and valve blocks
• Dents on the cylinder rods

E7 - CONDITION OF WIRING HARNESSES AND CABLES

CHECK

- Inspect the following sectors, checking the condition of the harnesses: no damage or loosening.

• Base control console,
• Hydraulic block,
• Battery,
• Middle hinge,
• Basket control console.

E8 - ENGINE SILENTBLOCS (*)

CHECK

E9 - ENGINE RPM (*)

CHECK

E10 - HYDROSTATIC TRANSMISSION CIRCUIT PRESSURES (*)

CHECK

E11 - SPEED OF MOVEMENTS (*)

CHECK

*(Contact your dealer)

F - EVERY 2,000 HOURS OPERATION

Carry out the operations described previously as well as the following operations.

F1 - COOLANT

DRAIN - REPLACE

These operations are to be carried out as necessary or once a year as winter approaches.
Place the platform on level ground with the engine stopped and cold.

DRAINING THE LIQUID

- Open the left-hand covers.
- Loosen the bleed screw 1 (Fig. F1/1)on the radiator.
- Undo the engine block drain plug 2 (Fig. F1/2).
- Remove the filling plug 3 (Fig. F1/3) from the radiator.
- Let the cooling circuit drain fully while ensuring that the ports do not get clogged.
- Check the condition of the hoses as well as the fastening devices and change the hoses if necessary.
- Rinse the circuit with clean water and use a cleaning agent if necessary.

FILLING WITH COOLING LIQUID

- Retighten the bleed screw 1 (Fig. F1/1).
- Retighten the drain plug 2 (Fig. F1/2) (Tightening torque 8 to 12 N.m).
- Prepare the coolant (Fig. F1/4).
- Slowly and completely fill the cooling system via the filler port 4 (Fig. F1/3).
- Leave the engine idling for a few minutes.
- Check for any leaks.
- Check the level and refill if necessary.
- Put back the filling plug 3 (Fig. F1/3).

The engine does not contain any corrosion resistor and must be filled during the whole year with a mixture containing 25% of ethylene glycol-based antifreeze.

F1/1

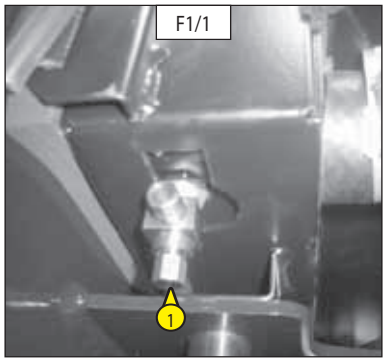

F1/2

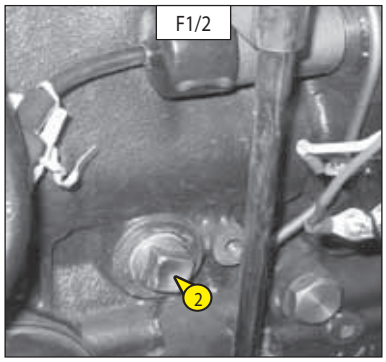

F1/3

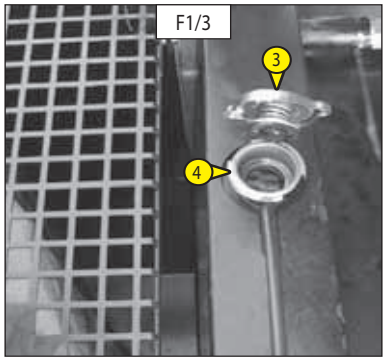

F1/4

FREEZING POINT DEPENDING ON ANTIFREEZE %	
ANTIFREEZE 5110 NF	TEMPERATURE
30%	-16°C
33%	-18°C
40%	-25°C
50%	-37°C

Carry out the operations described previously as well as the following operations.

F2 - VALVE SETS (*)

CHECK - ADJUST

F3 - WATER PUMP AND THERMOSTAT (*)

CHECK

F4 - ALTERNATOR AND STARTER (*)

CHECK

F5 - HYDRAULIC OIL TANK (*)

CLEAN

F6 - HYDRAULIC CIRCUIT PRESSURES (*)

CHECK

F7 - HYDRAULIC CIRCUIT OUTPUTS (*)

CHECK

F8 - FUEL INJECTION PRESSURE (*)

CHECK

F9 - INJECTION PUMP (*)

CHECK

F10 - INJECTORS

(CONTACT YOUR DEALER)

F11 - RADIATOR (*)

CHECK - DESCALE

F12 - TURBOCOMPRESSOR (*)

CHECK

*(Contact your dealer)

G - OCCASIONAL MAINTENANCE

G1 - FUEL SYSTEM

BLEED

These operations are only to be carried out in the following cases:
- A component of the fuel system replaced or drained.
- Make sure that the fuel level in the tank is high enough and turn the ignition key to notch 2.
- Open the left-hand covers.

BLEEDING THE FUEL FILTER

- Loosen the bleed screw 1 (Fig. G1/1).
- Open the valve 2 (Fig. G1/2).
- Activate the primer bulb 3 (Fig. G1/3) until the diesel fuel flows out, free from air, from the bleed screw.
- Tighten the bleed screw 1 (Fig. G1/1) while the diesel fuel is flowing out.

BLEEDING THE INJECTORS

- Loosen the pipe connectors 3 (Fig. G1/4) at one of the injectors.
- Activate the starter until the diesel fuel flows out, free of air, from the pipe connectors 4 (Fig. G1/4).
- Retighten these connectors while the diesel fuel is flowing out.

Do not engage the starter motor continuously for more than 30 seconds and allow it to cool for 2 minutes between unsuccessful attempts.

- The engine is now ready to be started.
- Run the engine at idle for 5 minutes immediately after bleeding the fuel feed circuit, in order to ensure that the injection pump has been bled thoroughly.

NOTE: If the engine runs correctly for a short time then stops or runs erratically, check for possible leaks in the low pressure circuit. If in doubt, contact your dealer.

G1/1

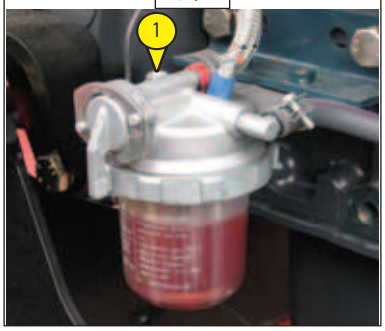

G1/2

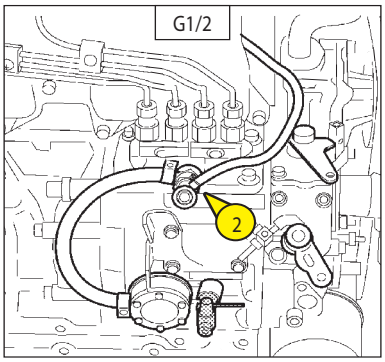

G1/3

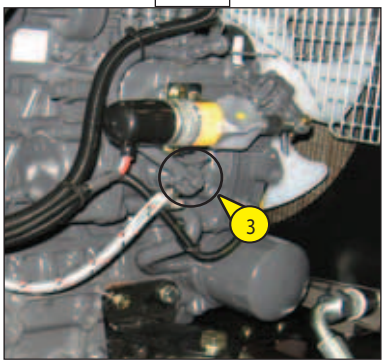

G1/4

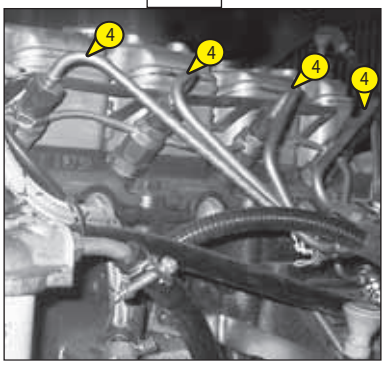

G2 - WHEELS

CHANGE

For this operation, we advise you to use the hydraulic jack MANITOU P/N 505507 and the safety support prop MANITOU P/N 554772.

- If possible, stop the platform on firm, level ground.
- Shut down the platform (see: 1 - OPERATING AND SAFETY INSTRUCTIONS: DRIVING INSTRUCTIONS UNLADEN AND LADEN).
- Immobilise the platform in both directions on the axle opposite the wheel to be changed.

Loosen the nuts of the wheel to be changed until they can be removed without much effort.

- Place the jack under the flared axle tube, as near as possible to the wheel and adjust the jack (Fig. G2/1).
- Lift the wheel until it comes off the ground slightly and put the safety support prop in place under the axle (Fig. G2/2).

The weight of one wheel is 210 kg.

- Completely unscrew the wheel nuts and remove them.
- Free the wheel by reciprocating movements and roll it to the side.
- Slip the new wheel on the wheel hub.
- Refit the nuts by hand, if necessary grease them.
- Remove the safety support prop and lower the platform using the jack.
- Tighten the wheel nuts with a torque wrench (see: 3 - MAINTENANCE: B - EVERY 250 HOURS OF SERVICE for the tightening torque).

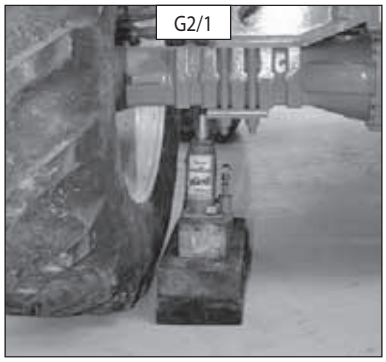
G2/1

G2/2

G3 - PLATFORM

SLINGING

- Take into account the position of the access platform centre of gravity for lifting.
- Place the hooks in the fastening points A provided for this purpose.
- Grasp the end of the front axle flared tubes with flexible straps.

G3

160 ATJ PLUS Euro 3

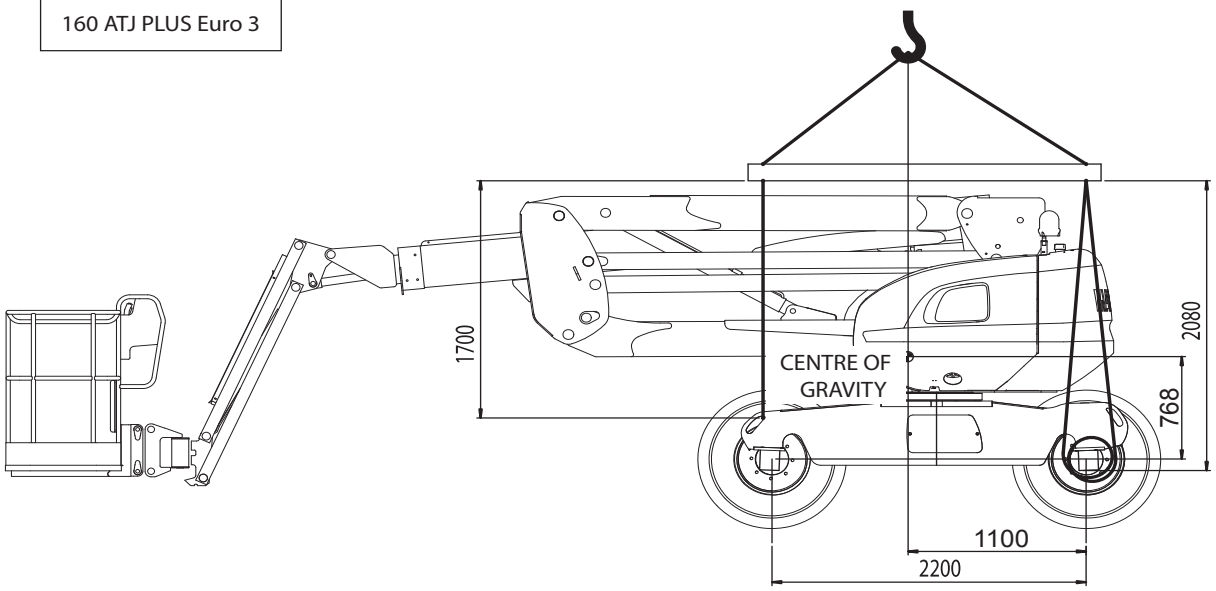

LOAD ON WHEELS IN TRANSPORT POSITION

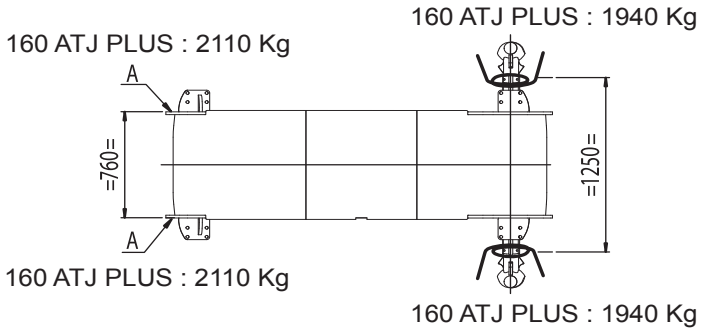

Total weight of platform: 8,100 kg

647121 (20/10/2017)
Mlt-x 735/741/1035 LSU S6-E3

G4 - PLATFORM ON A TRUCK BED

TRANSPORT

- See chapter 2 : LOADING/UNLOADING THE PLATFORM.

G5 - FREEWHEEL

ACTIVATING

If the platform is to be towed, follow the instructions below.

The platform may only be towed for a short distance and this must be by a machine with high braking power in order to hold it and with a connecting bar between the two machines.

1 - Chocking the platform.
2- Hydrostatic clutch

Warning, before performing this operation, take the necessary precautions as the machine will no longer have any brakes.

- Open the engine hood.
- Screw the hydrostatic pump HP relief valves 1 (Fig. G5/1) up to the hard spot + 1 and a half turns (13 mm wrench and 6 mm Allen key).

3 - Rear axle mechanical clutch
- Undo the screw 1 (Fig. G5/2) but do not remove it.
- Remove the cotter pin 2 (Fig. G5/2).
- Tighten the screw 1 (Fig. G5/2).

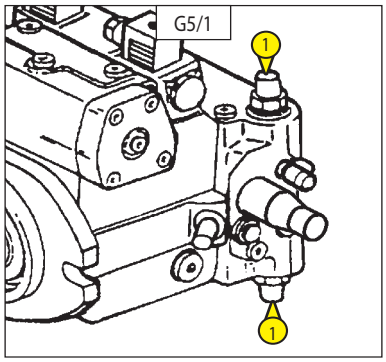

G5/1

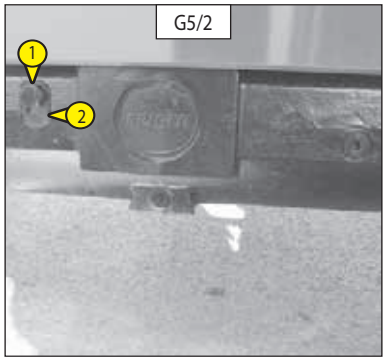

G5/2

- Undo the screw 1 (Fig. G5/3) but do not remove it.
- Remove the cotter pin 3 (Fig. G5/2).
- Tighten the screw 1 (Fig. G5/3).

Caution: after this operation, do not forget to take off the mechanical brake release.

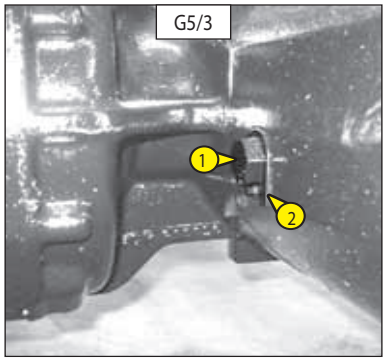

G5/3

G7 - MAINTENANCE PROP

USE

If you need to work on the arms, the turntable, the engine, etc.
Follow the instructions below:

- From the base console, lift the lower arms until the upper hinge is 1 m above the counterweight (Fig. G7/1).

MACHINES WITHOUT MAINTENANCE PROP

- Place a sling hung from a hoist around the upper hinge 1 (Fig. G7/1).
- From the base console, lower the lower arms until the strap becomes taut, then release the controls.
- Switch off the engine and power off the platform using the battery isolation switch.
- Carry out the necessary repairs...

MACHINES WITH MAINTENANCE PROP

- Remove the locking pin 2 (Fig. G7/2).
- Climb onto the front of the chassis (counterweight side), lift the maintenance prop 3 by hand (Fig. G7/3) and put the supporting arm 4 in place (Fig. G7/3). Make sure you lock this arm (Fig. G7/4).
- From the base console, lower the lower arms until the upper hinge comes into contact with the maintenance prop (Fig. G7/4 and G7/5), then release the controls.
- Switch off the engine and power off the platform using the battery isolation switch.
- Carry out the necessary repairs...

When the work is complete, follow the instructions below:

MACHINES WITHOUT MAINTENANCE PROP

- From the base console, lift the lower arms until the strap relaxes, then release the controls.
- Remove the sling from the upper hinge, put the platform in transport position and switch off the engine.

MACHINES WITH MAINTENANCE PROP

- From the base console, lift the lower arms by 20 cm, then release the controls.
- Climb onto the chassis, release the supporting arm from the maintenance prop, then lower it (Fig. G7/3).
- Put the platform in transport position and switch off the engine.

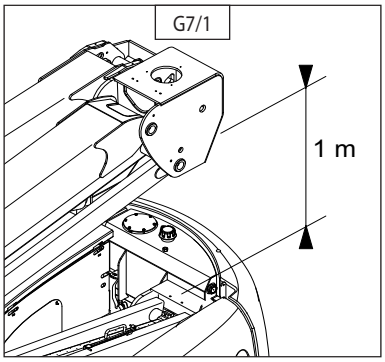

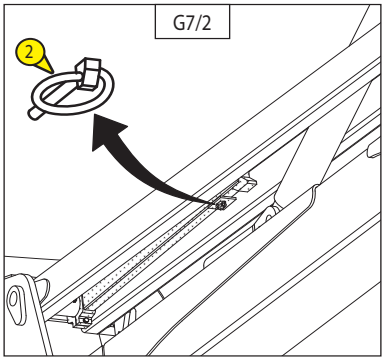

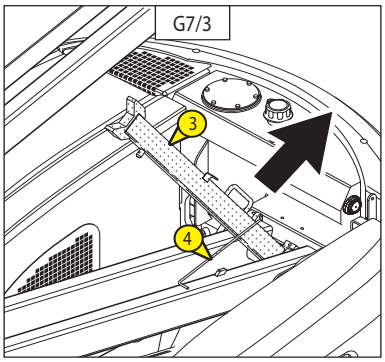

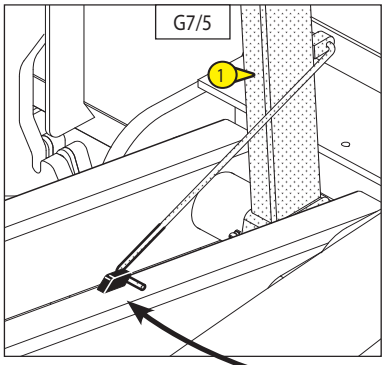

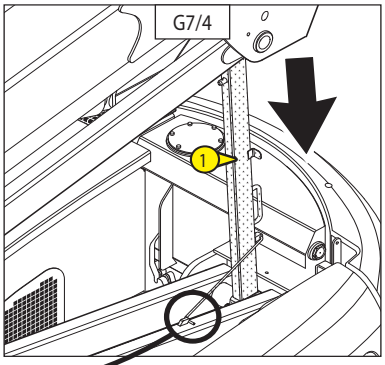

4 - ATTACHMENTS

4 - ATTACHMENTS

INTRODUCTION 4-2

PIPE CRADLE Part no. 52571261OPT 4-4

PANEL CRADLE Part no. 52571261OPT 4-8

INTRODUCTION

IMPORTANT

The PIPE CRADLE and PANEL CRADLE attachments cannot be installed at the same time on the same platform:
- The PANEL CRADLE must be removed if the PIPE CRADLE is installed.
- The PIPE CRADLE must be removed if the PANEL CRADLE is installed.

PIPE CRADLE — Part no. 52571261OPT

INSTALLATION

⚠ IMPORTANT ⚠

The nuts 5 must be replaced whenever the attachment is refitted.
Inspect all of the other components of the attachment before each new installation and replace if necessary.
Clean the stickers to make them legible and replace any stickers that are illegible or damaged.
Check that the stickers are present whenever spare parts have been replaced.
The cradles 1 must be fitted inside the basket and must rest on the basket floor.
The cradles 1 must be fitted symmetrically on each side of the basket and must be perpendicular to the basket floor.

- Place the machine in the transport position.
- Place the basket in the down position.

- Switch off the machine by turning the ignition key to position O.
- Place the first cradle 1 in the basket between the two pipes A1 and B1.

NOTE: position the safety sticker facing outwards.

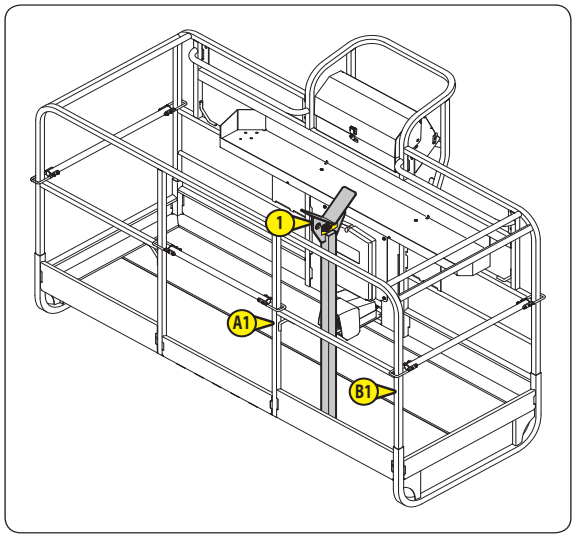

- Screw the first cradle 1 to the basket using two flanges 2 and the fasteners 3 to 5. Hand-tighten the nuts 5.

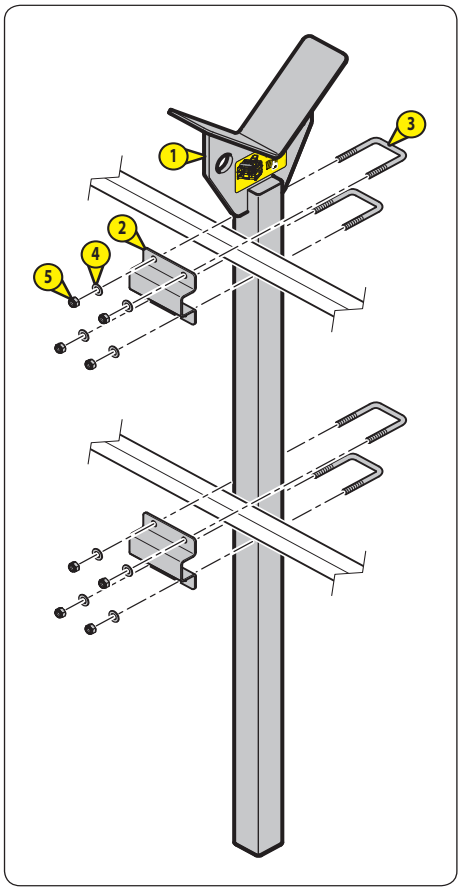

647121 (20/10/2017)
Mlt-x 735/741/1035 LSU S6-E3

- Place the second cradle 1 in the basket between the two pipes A2 and B2 and screw it to the basket like the first cradle.

NOTE: position the safety sticker facing outwards.

- Adjust the distance between the two cradles 1.
- Tighten the nuts 5 crosswise:
  - Two threads of the callipers 3 must be visible.

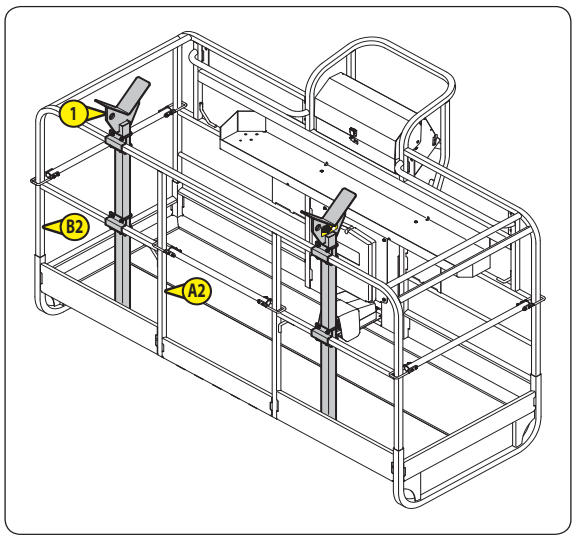

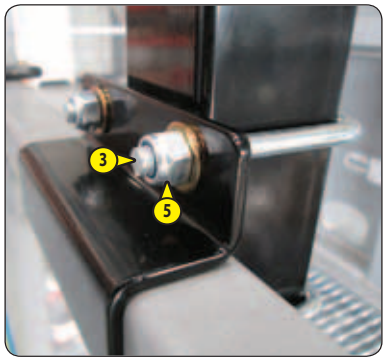

DISASSEMBLY

⚠ IMPORTANT ⚠

The nuts 5 must be replaced whenever the attachment is refitted. It is recommended to scrap them each time it is disassembled and to replace them for the next installation.
It is recommended to inspect all of the other components each time the attachment is disassembled and to replace them if necessary.
Store the attachment in a clean, dry place.

647121 (20/10/2017)
MHx735/741/1035 LSU S6-E3

INSTRUCTIONS FOR USE

⚠ IMPORTANT ⚠

Check that the pipe cradle is adjusted correctly, ◁ ADJUSTMENT.
The machine and the basket must be level before the pipe(s) is (are) positioned on the pipe cradle.
The length of the pipe(s) must not exceed the width of the basket.
The pipe(s) must be centred with the basket.

- Place the machine in the transport position on level ground.
- Level the basket and place it in the down position.
- If necessary, adjust the distance between the cradles, ◁ ADJUSTMENT.
- Place one or more pipes on the pipe cradle.
- Attach the pipe(s) to the cradles using straps (not supplied).

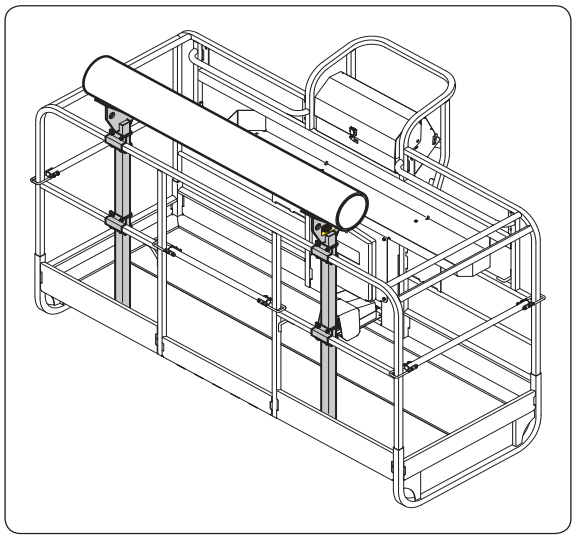

⚠ IMPORTANT ⚠

The weight of the pipe cradle and the pipe(s) reduces the basket's load capacity.

BASKET LOAD CAPACITY SPECIFICATIONS		160 ATJ+		
Number of people in the basket		1	2	3
Load capacity in the basket	kg (lbs)	255 (562)	175 (385)	95 (209)
Maximum permissible weight on the pipe cradle	kg (lbs)	50 (110)		

647121 (20/10/2017)
MHx 735/741/1035 LSU S6-E3

ADJUSTMENT

⚠ IMPORTANT ⚠

The cradles must rest on the basket floor.
The cradles must be fitted symmetrically on each side of the basket and must be perpendicular to the basket floor.

- Loosen the nuts 2.
- Adjust the width between the cradles 1.
- Retighten the nuts 5 crosswise:
  - Two threads of the callipers 3 must be visible.

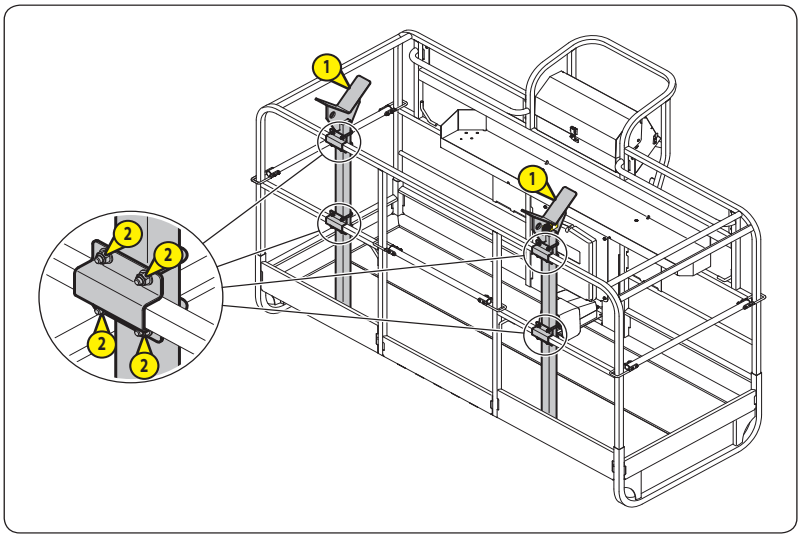

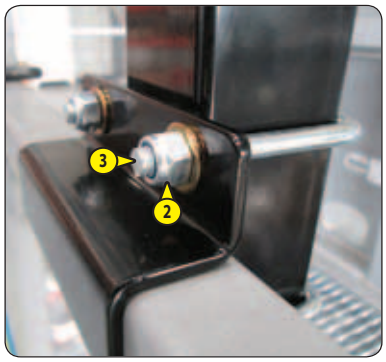

PIPE CRADLE STICKER — Part no. 52557917

Indicates the maximum permissible weight on the pipe cradle.

Quantity = 2: one sticker on each cradle.

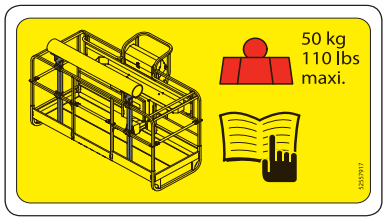

PANEL CRADLE — Part no. 52571261OPT

INSTALLATION

⚠ IMPORTANT ⚠

The nuts 6 and 13 must be replaced whenever the attachment is refitted.
Inspect all of the other components of the attachment before each new installation and replace if necessary.
Clean the stickers to make them legible and replace any stickers that are illegible or damaged.
Check that the stickers are present whenever spare parts have been replaced.

- Place the machine in the transport position.
- Position the basket floor approximately 1.2 m (4 pi) from the ground.
- Switch off the machine by turning the ignition key to position O.
- Position the cradles 1 on the base boards on either side of the basket.

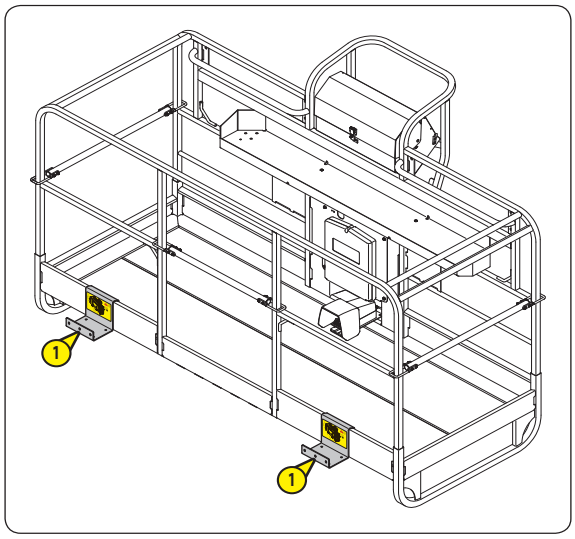

- Screw the cradles 1, the flanges 2 and the horizontal pads 3 using the screws 4, 5 and 6:
  - The screw heads 4 must sink approximately 2 mm into the horizontal pads 3.
  - Two threads of the screws 4 must be visible.

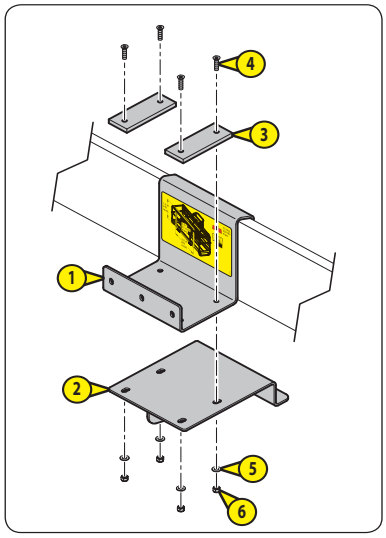

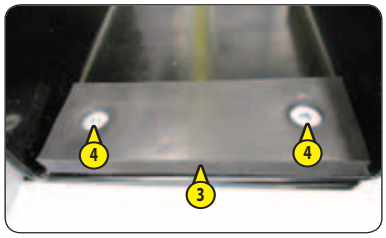

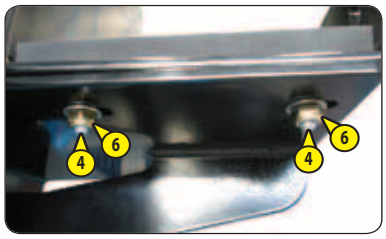

- Mount the vertical pads 7 using the screws 8, 9 and 10:
  - Tightening torque = 8.2 N.m ± 1.6 N.m

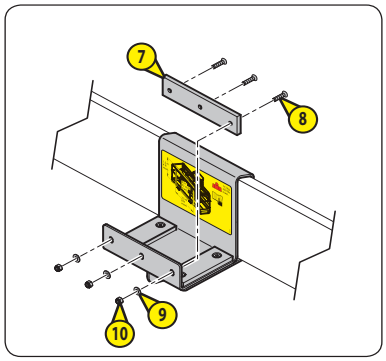

⚠ IMPORTANT ⚠

Only configurations I and II are authorised

- Choose one of the two configurations:

CONFIGURATION		I	II
Minimum panel width	m (pi)	1.2 (4)	2.2 (6.5)
Maximum panel width	m (pi)	2.5 (8)	
Maximum panel height	m (pi)	1.2 (4)	

- Remove the screws A or B (screw 11, washers 12 and nuts 13) depending on the configuration chosen.
- Scrap the nuts 13.
- Move and screw the cradles using the screws A or B with new nuts 13:
  - Tightening torque = 20 N.m ± 4 N.m

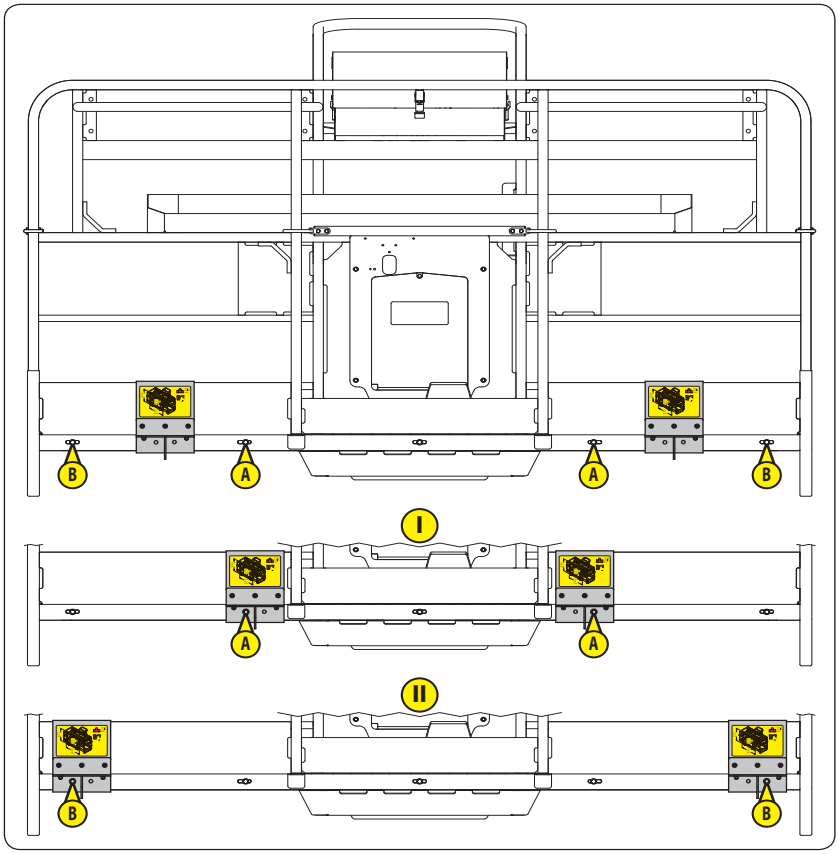

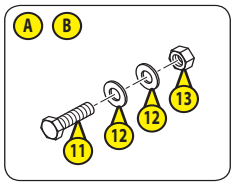

- Install the foam profiles 14 and the sleeves 15.
- Install strap 16 between the two pipes C1 and D1 and between the two pipes C2 and D2 of the basket.

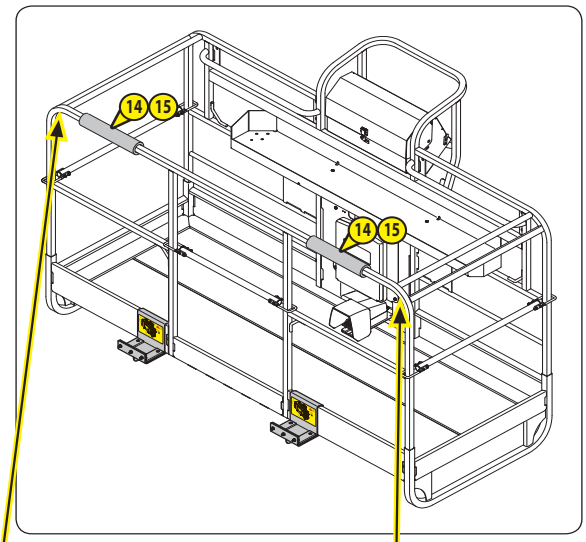

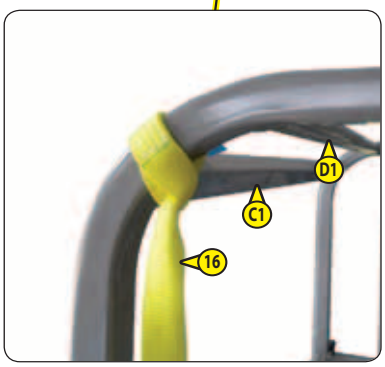

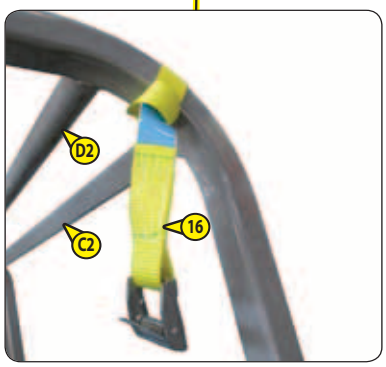

647121 (20/10/2017)
Mlt-x 735/741/1035 LSU S6-E3

DISASSEMBLY

⚠ IMPORTANT ⚠

The nuts 6 must be replaced whenever the attachment is refitted. It is recommended to scrap them each time it is disassembled and to replace them for the next installation.
It is recommended to inspect all of the other components each time the attachment is disassembled and to replace them if necessary.
Store the attachment in a clean, dry place.

- Remove the panel cradle.
- Scrap the nuts 13.
- Replace the screws A or B with new nuts 13:
  - Tightening torque = 20 N.m ± 4 N.m

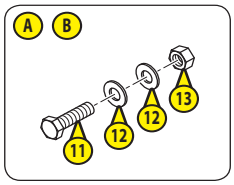

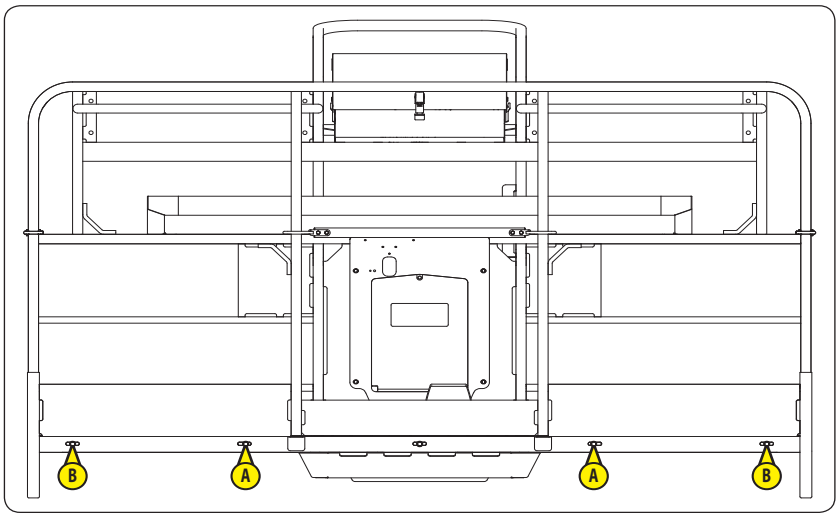

647121 (20/10/2017)
MHtx 735/741/1035 LSU S6-E3

INSTRUCTIONS FOR USE

⚠ IMPORTANT ⚠

The machine and the basket must be level before a panel can be placed on the panel cradle.
The panel(s) must be centred with the basket.

- Place the machine in the transport position on level ground.
- If required, adjust the basket height.
- Level the basket.
- Place one or more panels on the panel cradle.
- Attach the panel(s) to the basket using the strap.

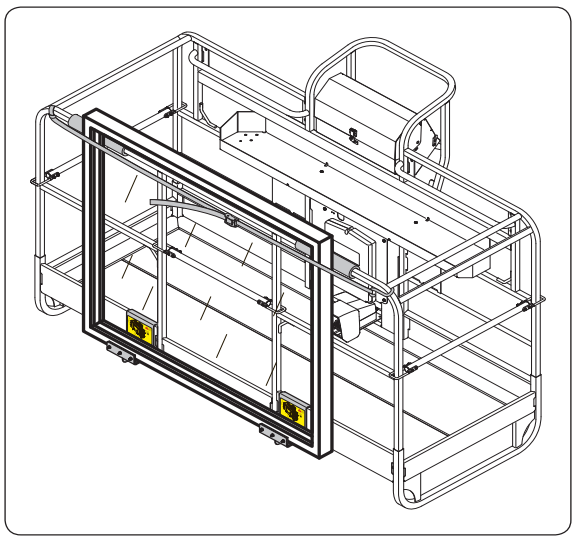

⚠ IMPORTANT ⚠

The weight of the panel cradle and the panel(s) reduces the basket's load capacity.

BASKET LOAD CAPACITY SPECIFICATIONS		160 ATJ+		
Number of people in the basket		1	2	3
Load capacity in the basket	kg (lbs)	192 (423)	112 (246)	32 (70)
Maximum permissible weight on the panel cradle	kg (lbs)	113 (250)		

647121 (20/10/2017)
Mlt-x 735/741/1035 LSU S6-E3

⚠ IMPORTANT ⚠

Only configurations I and II are authorised, ◁ INSTALLATION to modify the configuration.

CONFIGURATION		I	II
Minimum panel width	m (pi)	1.2 (4)	2.2 (6.5)
Maximum panel width	m (pi)	2.5 (8)	
Maximum panel height	m (pi)	1.2 (4)	

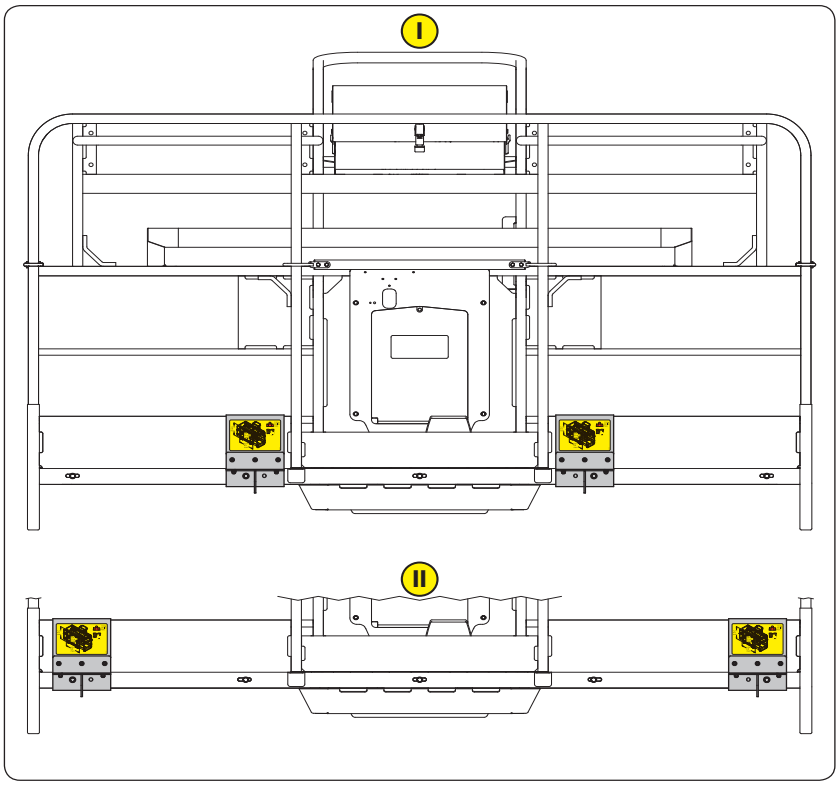

PIPE CRADLE STICKER — *Part no. 52557917*

Indicates the maximum permissible weight on the panel cradle and the maximum dimensions of the panel(s).

Quantity = 2: one sticker on each cradle.

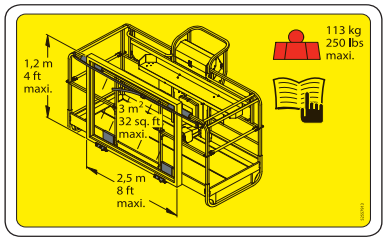

647121 (20/10/2017)
MHx735/741/1035 LSU S6-E3