duma rent
www.duma-rent.com

STILL

RX 20 Technical Data
Electric Forklift Truck

RX 20-20L/Li-Ion

Li-Ion INSIDE

IFOY winner
IFOY AWARD
counter balanced truck
of the year 2018

first in intralogistics

RX 20 Electric Forklift Truck
Electrifying

Distinguishing marks	1.1	Manufacturer				STILL
	1.2	Manufacturer's type designation				**RX 20-20L/Li-Ion**
	1.2.1	Manufacturer type number				6225
	1.3	Drive				Electric
	1.4	Operation				Seated
	1.5	Capacity/load		Q	kg	2000
	1.6	Load centre		c	mm	500
	1.8	Load distance		x	mm	388
	1.9	Wheel base		y	mm	1517
Weights	2.1	Service weight (incl. battery)			kg	3486
	2.2	Axle load, laden	front/rear		kg	4860/623
	2.3	Axle load, unladen	front/rear		kg	1689/1794
Wheels/chassis	3.1	Tyres				Superelastic
	3.2	Tyre size	front			200/50-10
	3.3	Tyre size	rear			140/55-9
	3.5	Number of wheels (x = driven)	front/rear			2x/2
	3.6	Track width	front/rear	b_{10}/b_{11}	mm	942/172
Dimensions	4.1	Angle of mast/fork carriage	forwards/backwards	α/β	°	5/6
	4.2	Height of mast	when lowered	h_1	mm	2160
	4.3	Free lift		h_2	mm	150
	4.4	Lift		h_3	mm	3180
	4.5	Height of mast	when raised	h_4	mm	3742
	4.7	Height over overhead guard (low variant)		h_6	mm	2035 (1949)
	4.8	Seat height/standing height		h_7	mm	965
	4.12	Coupling height		h_{10}	mm	473
	4.19	Total length		l_1	mm	2866
	4.20	Length including fork backs		l_2	mm	2066
	4.21	Total width		b_1	mm	1149
	4.22	Depth of prongs		s	mm	40
	4.22.1	Width of prongs		e	mm	80
	4.22.2	Length of prongs		l	mm	800
	4.23	Fork carriage DIN 15173, class/form A, B				ISO II A
	4.24	Fork carriage width		b_3	mm	980
	4.31	Ground clearance under mast		m_1	mm	≥90
	4.32	Ground clearance, centre of wheel base		m_2	mm	114
	4.33	Working aisle width with 1000 x 1200 pallet crossways		A_{st}	mm	3390
	4.34	Working aisle width with 800 x 1200 pallet lengthways		A_{st}	mm	3516
	4.35	Turning radius		W_a	mm	1678
	4.36	Smallest pivot point distance		b_{13}	mm	-
Performance data	5.1	Driving speed (Blue-Q/Normal/Sprint)	with load		km/h	16/16/20
	5.1.1	Driving speed (Blue-Q/Normal/Sprint)	without load		km/h	16/16/20
	5.2	Lifting speed	with load		m/s	0.45
	5.2.1	Lifting speed	without load		m/s	0.63
	5.3	Lowering speed	with/without load		m/s	0.48/0.41
	5.5	Traction	with/without load		N	4800/5000
	5.6	Max. traction	with/without load		N	11900/8700
	5.7	Gradeability	with/without load		%	15/18.1
	5.8	Max. gradeability	with/without load		%	23/27
	5.9	Acceleration time/15 m (Blue-Q/Normal/Sprint)	with load		s	5.8/5.5/5.3
	5.9.1	Acceleration time/15 m (Blue-Q/Normal/Sprint)	without load		s	5.4/5.1/4.8
	5.10	Service brake				Electric/mechanical
Electric motor	6.1	Drive motor, rating S2 60 min			kW	2x6.5
	6.2	Lifting motor, output at S3 15%			kW	11
	6.3	Battery according to DIN 43531/35/36 A, B, C, no				DIN 43531 A (B)
	6.4	Battery voltage		U	V	48
	6.4.1	Battery capacity		K_5	Ah	750
	6.5	Battery weight			kg	1013
	6.6	Energy consumption in accordance with EN 16796			kWh/h	4.6
	6.7	Turnover performance			t/h	155
	6.8	Energy consumption at indicated turnover performance			kWh/h	6.2
Other	10.1	Working pressure for attachments			bar	240
	10.2	Oil volume for attachments			l/min	26.5
	10.7	Sound level at driver's ear			dB(A)	<66
	10.7.1	Human vibrations: Acceleration in accordance with EN 13059			m/s^2	<0.6
	10.8	Trailer coupling, item/DIN type				Bolt

This specification sheet, which conforms to VDI guideline 2198, provides the technical values for the standard equipment only.
Different tyres, other masts, additional equipment etc. may produce different figures.

RX 20 Electric Forklift Truck
Technical Drawings

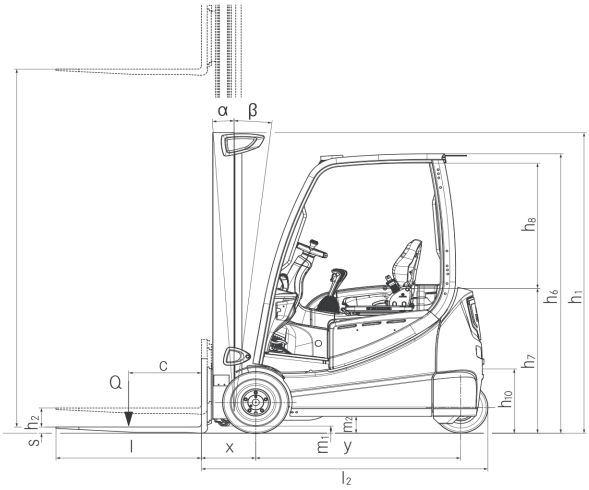

3-wheel side view

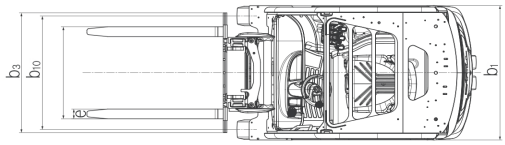

3-wheel top view

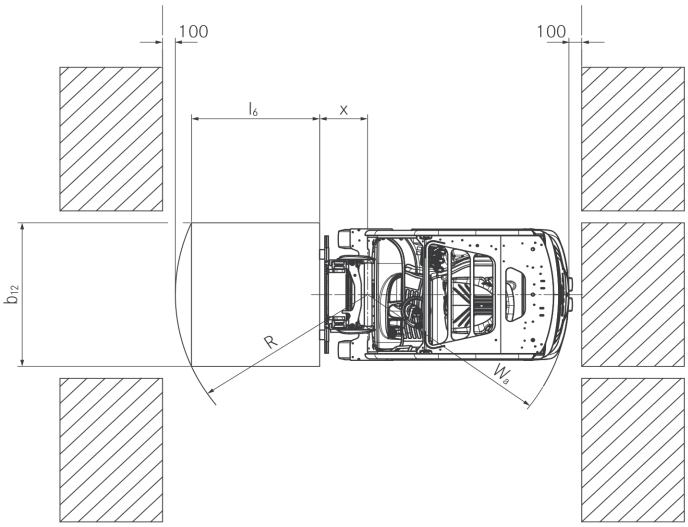

3-wheel top view

RX 20 Electric Forklift Truck
Mast Table

						Triplex mast	
RX 20-20		Nominal lift		h_3	mm	5080	
		Height		h_1	mm	2260	
		Free lift		h_2	mm	1780	
		Maximum height		h_4	mm	5644	
		Angle of mast	forwards	α	°		
		Angle of mast	backwards	β	°		
		Fork lock-in position centre-centre			mm		
	RX 20-20L	Tyres	rear			140/55-9	
		Tyres	front			200/50-10	
		Track	front/rear		mm	942/172	990
		Maximum width		b	mm	1149	1188

RX 20 Electric Forklift Truck
Basic Load Capacities

RX 20-20L/RX 20-20PL Triplex mast single SE tyres

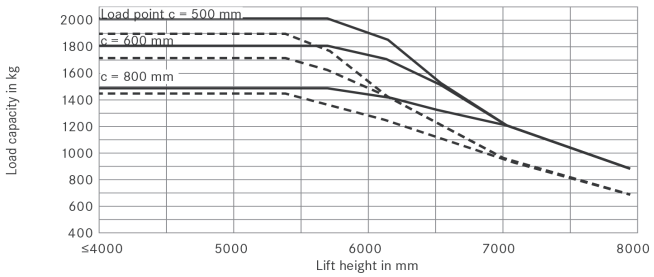

with standard forks — — — — With integrated side shifter and standard forks

The listed values may vary depending on the forklift equipment

Gradients

	Gradient	Maximum distance in m Maximum distance that can be driven in 60 minutes. RX 20-20L
With nominal load		
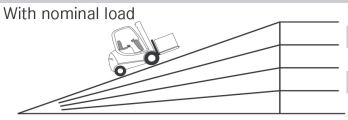	22.9%	1079
	18.6%	2611
	1.2%	6857
	6.1%	12186
Without load		
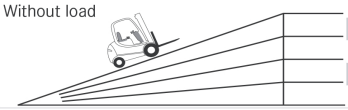	25.1%	3027
	18.1%	5632
	9.6%	13570
	4.7%	20000

Dry rough concrete = coefficient of friction 0.80
Battery: Standard as per data sheet; speed is variable