duma » rent

www.duma-rent.com

YANMAR

MINI-EXCAVATOR

ViO38-6

Operating weight	3575 kg (canopy) / 3695 kg (cabin)
Engine gross power	18.9 kW / 25.3 HP at 2200 rpm
Digging force (arm)	18.1 kN
Digging force (bucket)	32.1 kN

DIMENSIONS

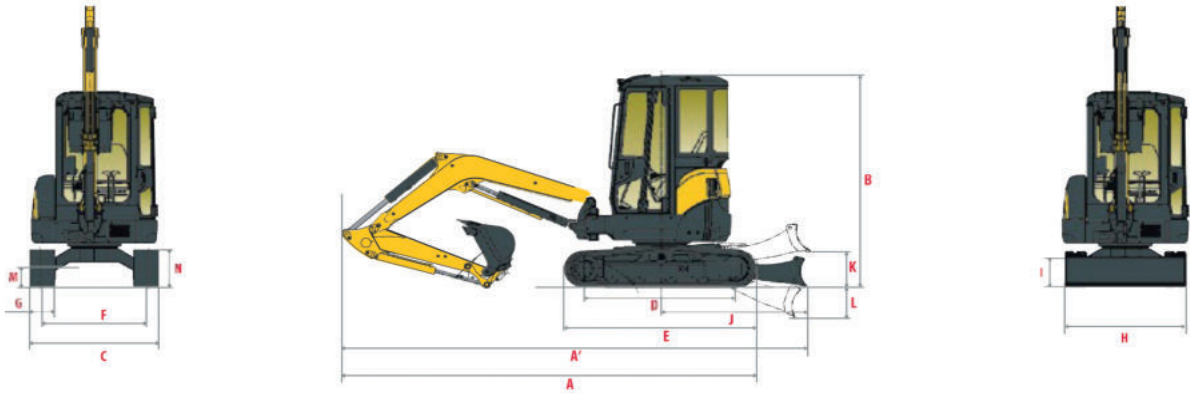

A	Overall length	4760 mm	H	Overall blade width	1740 mm
A'	Overall length with blade at the back	5320 mm	I	Overall blade height	380 mm
B	Overall height	2470 mm	J	Blade distance	1630 mm
C	Overall width	1740 mm	K	Max. blade height above the ground	425 mm
D	Length of track on ground	1710 mm	L	Max. lowering depth from the ground	370 mm
E	Undercarriage length	2160 mm	M	Minimum ground clearance	320 mm
F	Lane	1440 mm	N	Ground clearance under counterweight	-
G	Track width	300 mm			

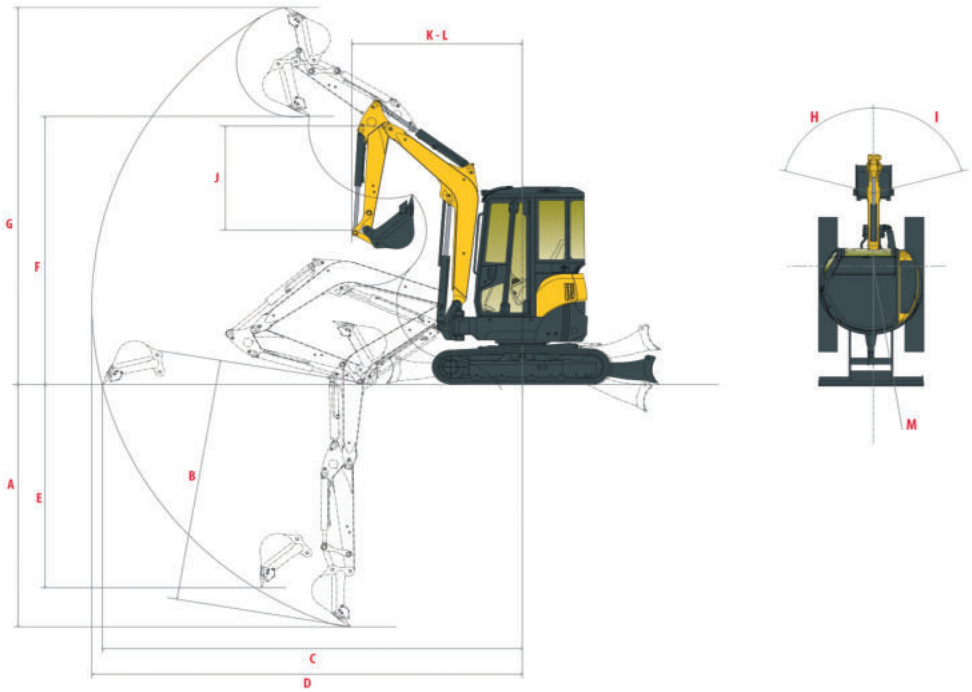

A	Max. digging depth - Blade lifted	3350 mm	H	Boom swinging base to left	43°
B	Max. digging depth - Blade lowered	3530 mm	I	Boom swinging base to right	65°
C	Max. digging reach on ground	5350 mm	J	Arm length	1620 mm
D	Max. digging reach	5470 mm	K	Front turning radius	2100 mm
E	Max. vertical wall	2820 mm	L	Front turning radius with boom swing	1870 mm
F	Max. unloading height	3730 mm	M	Rear turning radius	775 mm
G	Max. cutting height	5130 mm	M'	Rear turning radius with additional counterweight	850 mm

LIFTING FORCE

Tipping load, rating over front

Tipping load, rating over side 90°

Cabin, Standard counterweight																							
Blade on ground												Blade above ground											
A	(A=)	Max.		3,5 m		3 m		2,5 m		2 m		(A=)	Max.		3,5 m		3 m		2,5 m		2 m	
B																							
3 m	4253	480	*815	*720	*720	-	-	-	-	-	-	4253	490	560	*720	*720	-	-	-	-	-	-
2 m	4654	410	*845	640	*885	*925	*925	*780	*780	-	-	4654	410	450	640	745	*925	*925	*780	*780	-	-
1 m	4771	375	*835	600	*1090	755	*1305	970	*1680	-	-	4771	365	450	590	650	795	815	950	1040	-	-
0 m	4629	385	*865	560	*1235	685	*1500	875	*1955	1180	*2465	4629	400	450	560	620	675	775	875	970	1150	1295
-1 m	4195	440	*905	540	*1205	685	*1470	875	*1825	1180	*2375	4195	430	490	540	600	685	745	875	980	1235	1295
-1,5 m	3834	500	*940	550	*1090	725	*1345	885	*1640	1215	*2080	3834	490	540	570	610	665	785	855	950	1205	1285
-2 m	3323	695	*845	-	-	755	*1050	1030	*1395	-	-	3323	640	715	-	-	745	785	1080	1020	-	-

[The data in this table represents the lifting capacity in accordance with IOS 10567. They do not include the weight of the bucket and correspond to 75% of the maximum static tipping load of the 87% of the hydraulic lifting capacity. Data marked with * are the hydraulic limits of the lifting force.]

TECHNICAL SPECIFICATIONS

[WEIGHT +/- 2% (EN STANDARDS)]

	Transport weight	Operating weight	Ground pressure (kPa [Kg/cm²])
Canopy version / Rubber crawlers	3500 kg	3575 kg	33
Canopy version / Steel crawlers	3600 kg	3675 kg	33.9
Cabin version / Rubber crawlers	3620 kg	3695 kg	34.1
Cabin version / Steel crawlers	3720 kg	3795 kg	35
With additional counterweight	+ 150 kg		-

[ENGINE]

Type	3TNV88-ESBV
Fuel	Diesel
Net Power	18.5 kW / 24.8 HP at 2200 rpm
Gross Power	18.9 kW / 25.3 HP at 2200 rpm
Displacement	1.642 l
Maximum torque	85.5 - 94.5
Cooling	Water-cooling
Starter	12 V - 1.7 kW
Battery	12 V - 65 Ah
Alternator	12 V - 55 A

[HYDRAULIC SYSTEM]

Maximum pressure	220 bars
1 double piston pump with variable flow	2 x 37 l.min^{-1}
1 gear pump	26.2 l.min^{-1}
1 gear pump for pilot line	10.8 l.min^{-1}

PTO	Theoretical data	
	Pressure (bar)	Flow (l.min^{-1})
2 ways	0 - 220	63.2 - 1
1 way	0 - 220	63.2 - 1

Oil flow decreases as the pressure increases

[PERFORMANCE]

Travel speed	2.7 / 4.5 km/h
Rotation speed	9.5 rpm
Digging force (arm)	18.1 kN
Digging force (bucket)	32.1 kN
Gradability	30°
Noise Level (2000/14/CE&2005/88/CE)	LWAG: 94 dBA ; LPAG: 82 dBA

[UNDERCARRIAGE]

Number of top rollers	1
Number of bottom rollers	4
Track tensioning system	Grease cylinder

[CAPACITIES]

Fuel tank	41 l
Coolant	4.2 l
Engine oil	7.3 l
Hydraulic circuit	62 l
Hydraulic tank	40 l

MAINTENANCE FREQUENCY

[Change engine oil and filter: 50 hours (1st) / 500 hours (2nd)] [Change fuel filter: 250 hours] [Change hydraulic oil filter: 1000 hours]
[Change hydraulic oil return filter: 50 hours (1st) / 500 hours (2nd)] [Change cooling fluid: 2000 hours]